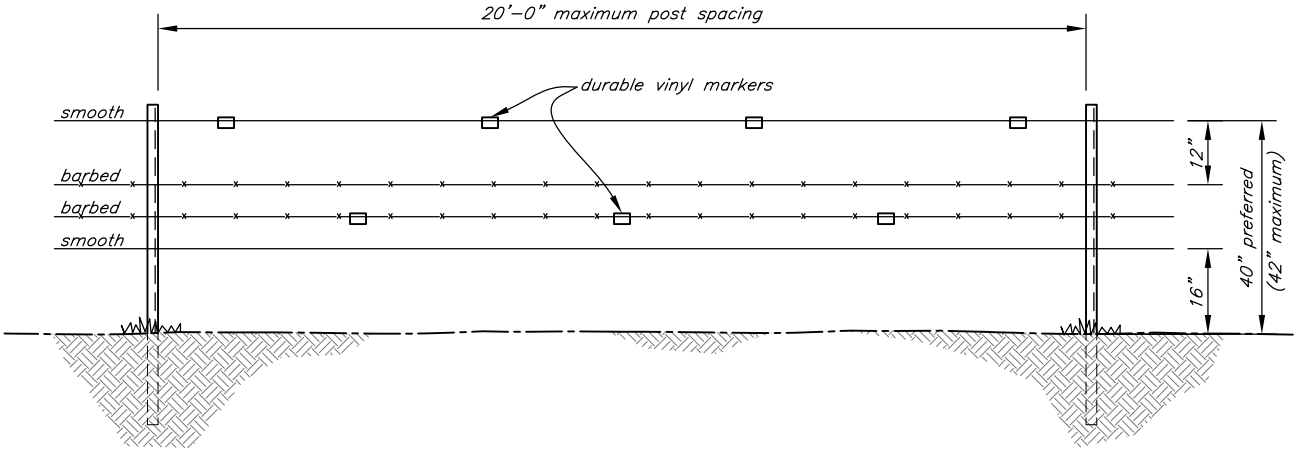

4-STRAND BARBED & SMOOTH WIRE FOR AREAS WITH LIVESTOCK AND WILDLIFE PRESSURE

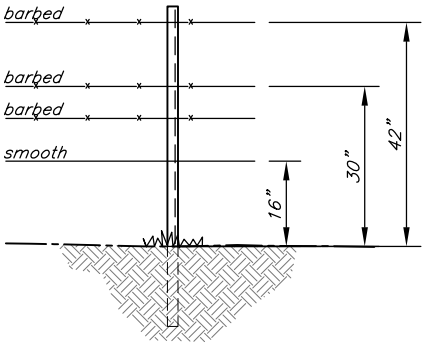

4-STRAND BARBED & SMOOTH WIRE FOR AREAS OF REGULAR LIVESTOCK PRESSURE

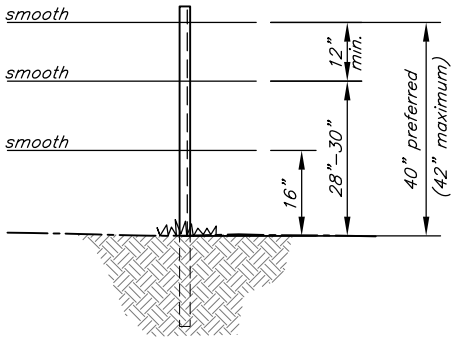

(for additional livestock control, used barbed wire instead of smooth wire on top 2 strands)

3-STRAND SMOOTH WIRE FOR AREAS OF LIGHT LIVESTOCK PRESSURE

	Date	CAD FILE NAME	WILDLIFE FENCE
Designed NRCS-OR	1/2010	or_wildlife_fence.dwg	
Drawn		DRAWING NO.	
Checked		SHEET 1 OF 2	LIVESTOCK FACILITIES
Approved		NRCS U.S.D.A. NATURAL RESOURCES CONSERVATION SERVICE	

E:\cad_support\CAD Drawings\(c)Livestock_Facilities1206\Fences\Misc_Fences\or_wildlife_fence.dwg, 1/26/2010 7:29:23 AM

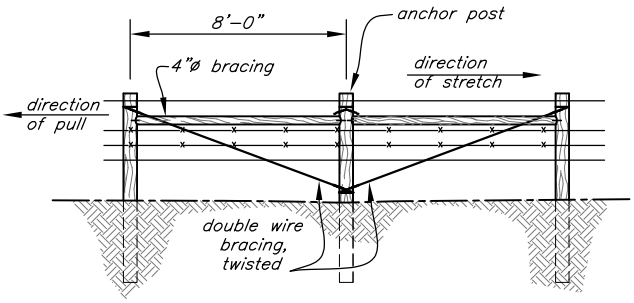

LINE BRACE

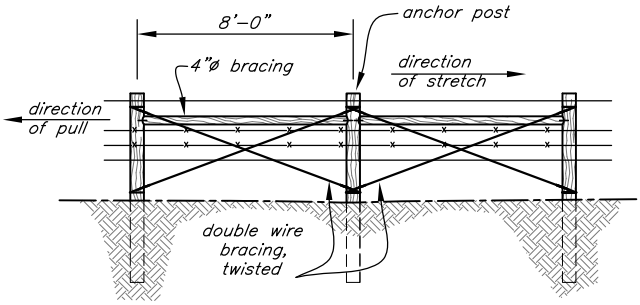

LINE BRACE

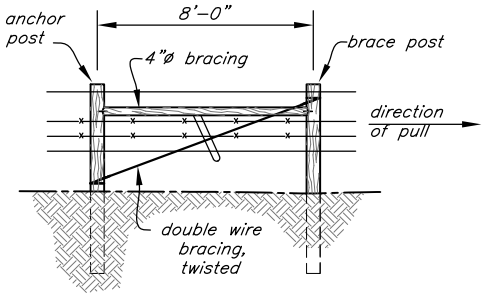

1–SPAN END

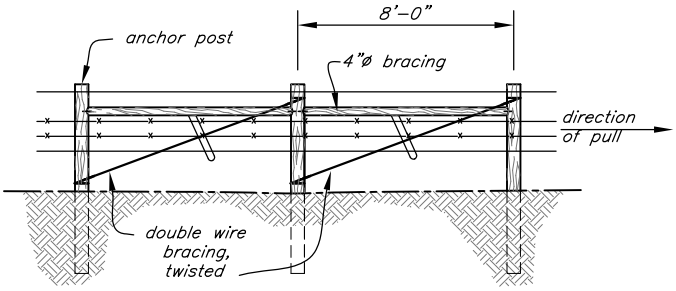

2–SPAN END

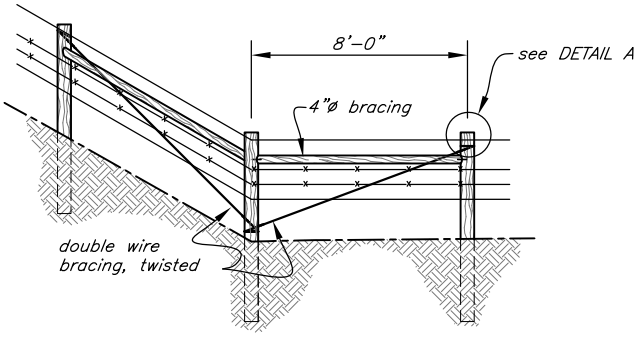

CORNER BRACE

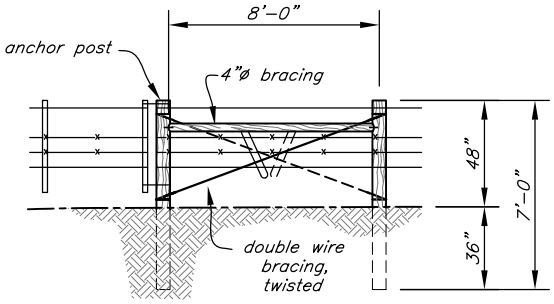

GATE BRACE

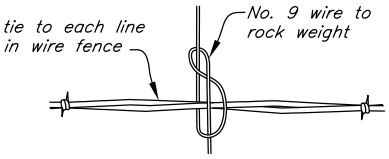

TIEDOWN DETAIL

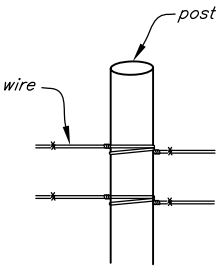

DETAIL A

1. Double wrap all bracing.
2. All brace posts to be 7' long, 3' embedment.
3. Dap braces into posts.
4. Spike braces to posts.

	Date	CAD FILE NAME	WILDLIFE FENCE
Designed NRCS–OR	1/2010	or_wildlife_fence.dwg	
Drawn		DRAWING NO.	
Checked		SHEET 2 OF 2	LIVESTOCK FACILITIES
Approved		NRCS U.S.D.A. NATURAL RESOURCES CONSERVATION SERVICE	

E:\cad_support\CAD Drawings\(c)Livestock_Facilities1206\Fences\Misc_Fences\or_wildlife_fence.dwg, 1/26/2010 7:30:01 AM