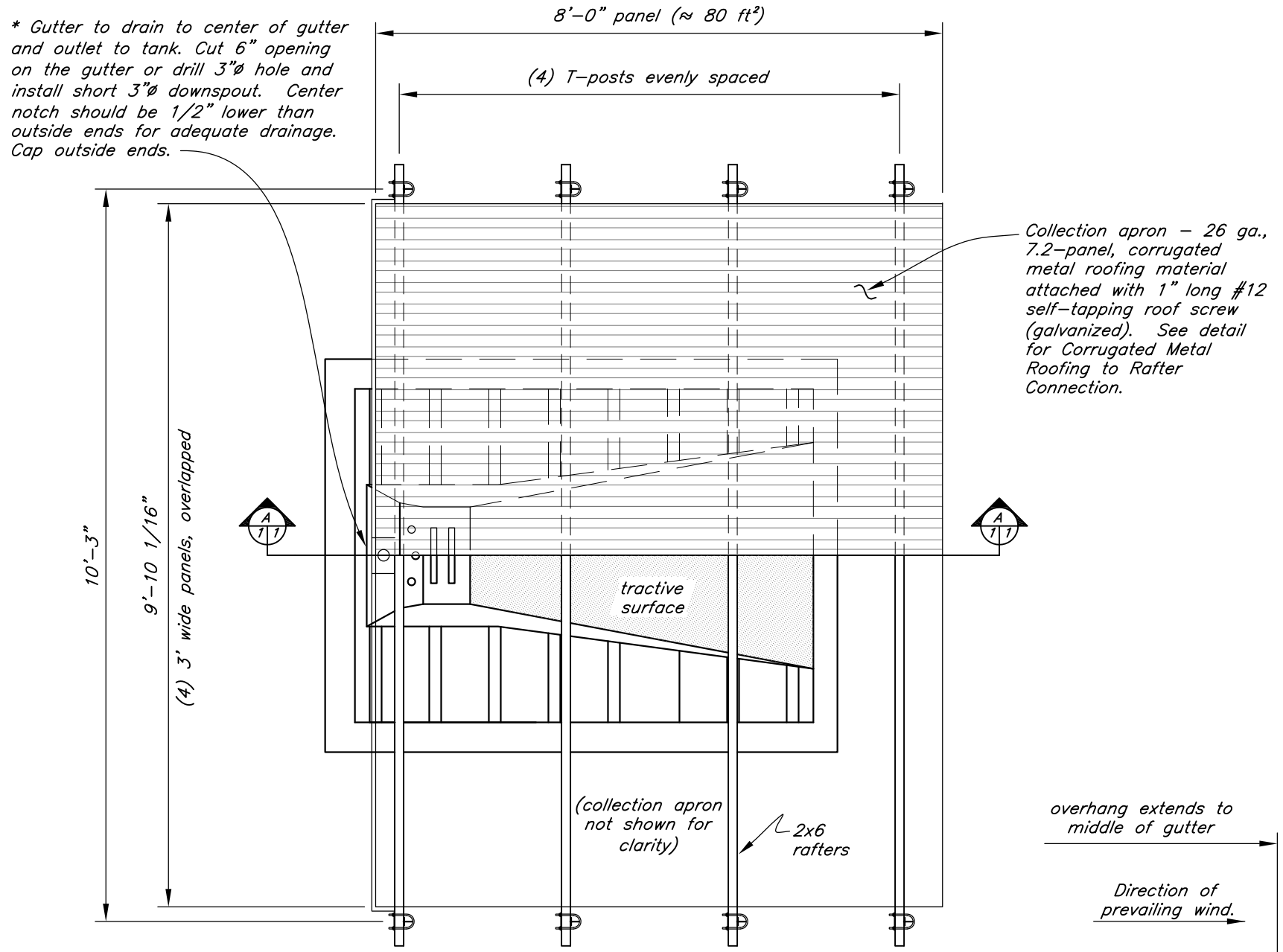

PLAN VIEW

This drawing to be used in conjunction with Oregon NRCS Practice Standard 636, Wildlife Guzzler Job Sheet.

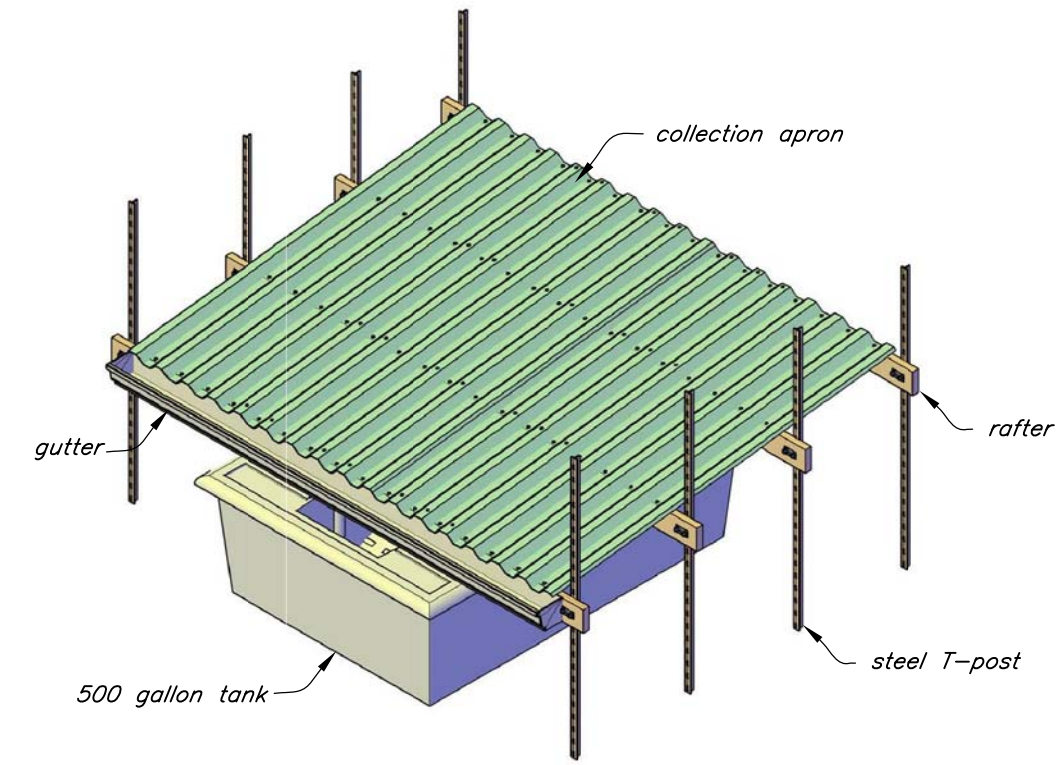

ISOMETRIC

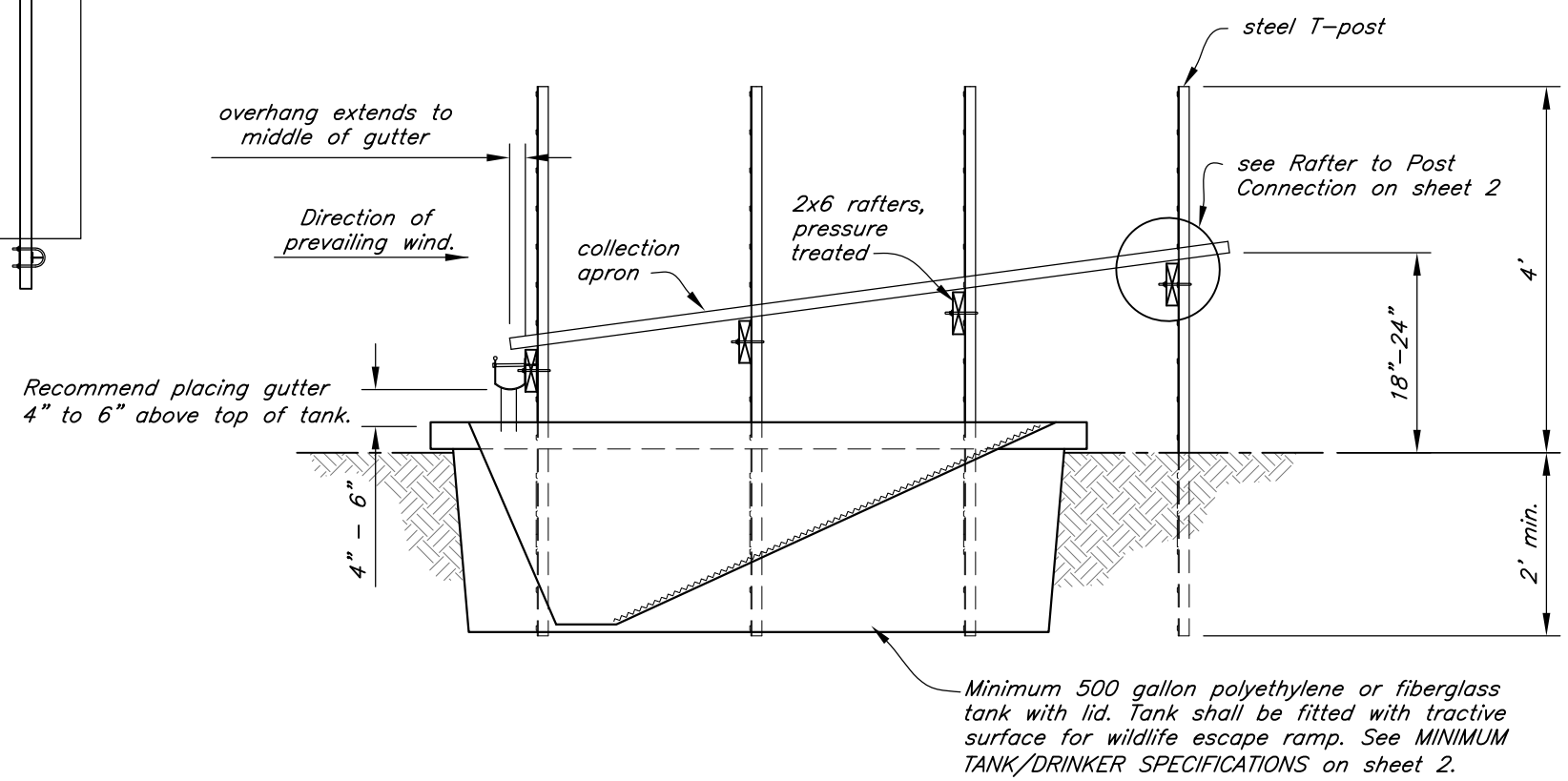

SECTION VIEW A/1 1

DRAWING NOT TO SCALE

Designed T. Morales, PE 10/2011
Drawn K. Yasumiishi 10/2011
Checked
Approved 10/2011
Title State Conservation Engineer

SINGLE APRON LAYOUT

SMALL GAME WILDLIFE GUZZLER – SINGLE APRON

PRACTICE STANDARD: 636

JOB CLASS: _____ BASIN _____ COUNTY, OREGON

NRCS
Natural Resources Conservation Service
United States Department of Agriculture

File Name
or_sm_guzzler_single_tpost.dwg

Drawing No.
T-POST

Sheet 1 of 2

E:\cad_support\CAD Drawings\(c)Wildlife\or_sm_guzzler_single_tpost.dwg, 10/18/2011 12:10:22 PM

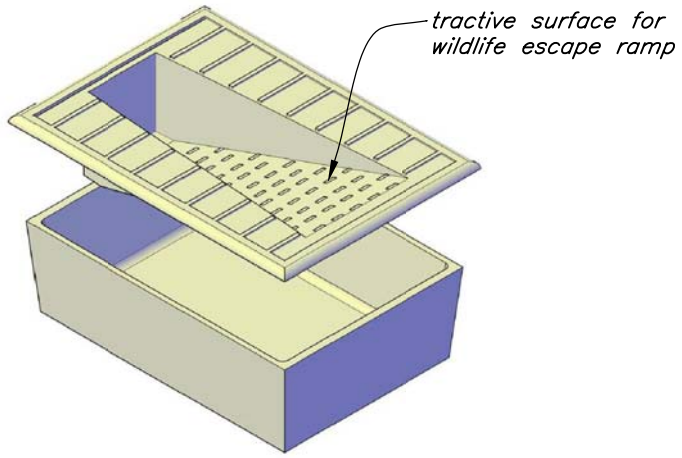

TYPICAL TANK W/LID ISOMETRIC

Minimum 500 gallon polyethylene or fiberglass tank with lid. Exact dimensions of tank vary between manufacturer and model. See MINIMUM TANK/DRINKER SPECIFICATIONS on this sheet.

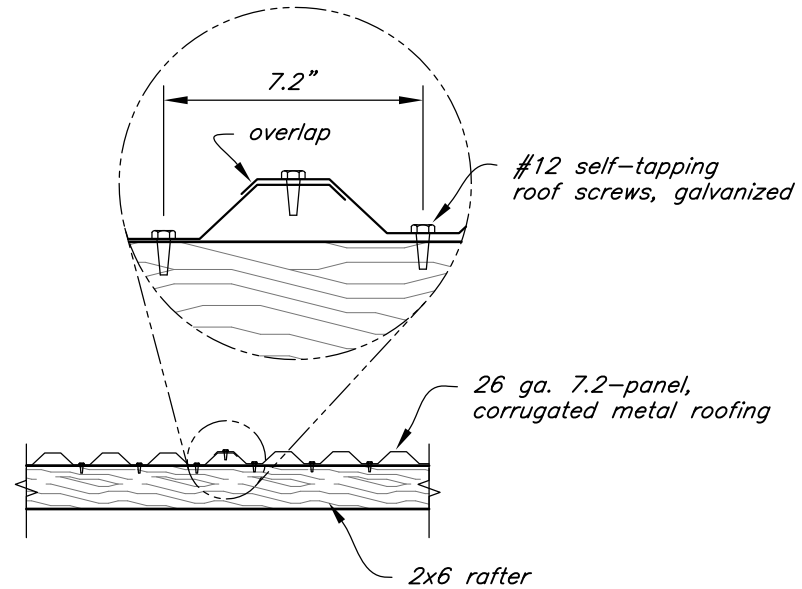

CORRUGATED METAL ROOFING TO RAFTER CONNECTION

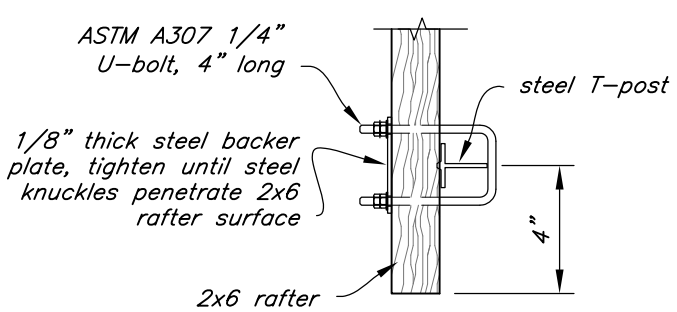

PLAN VIEW

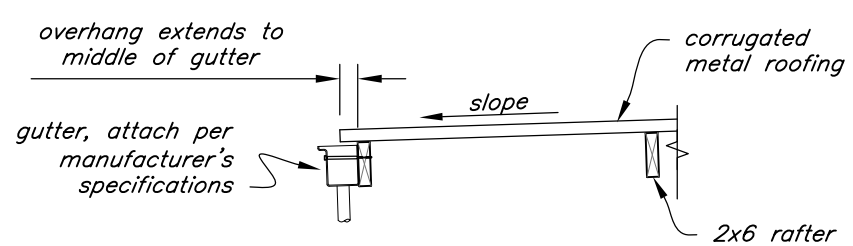

GUTTER TO RAFTER CONNECTION

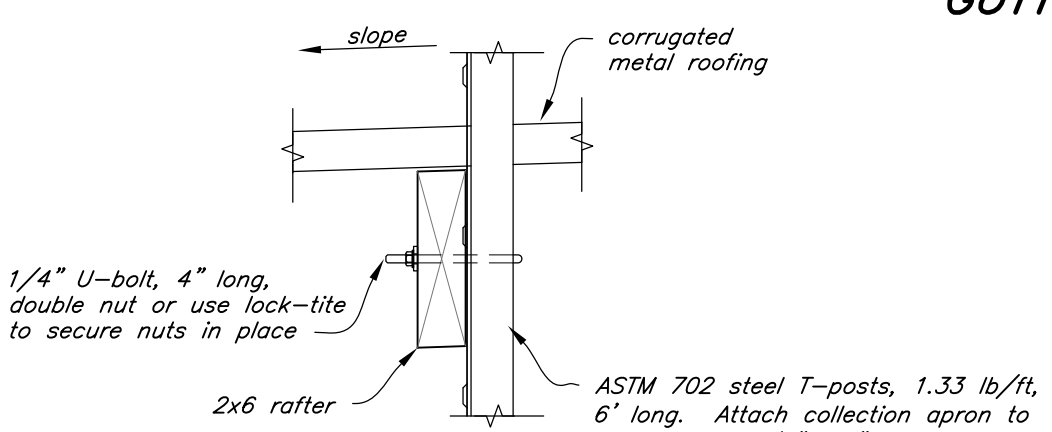

ELEVATION

RAFTER TO POST CONNECTION

SITE PREPARATION AND TANK INSTALLATION INSTRUCTIONS:

1. Project site shall be as flat as possible for ease of construction. Avoid areas with depressions. If tank is empty or partially empty during heavy rains and flooding occurs, tank may float.
2. Excavate site to the appropriate depth and width of tank and provide necessary trenching for piping and piping appurtenances. Clear site of rocks and other sharp objects.
3. Install all necessary plumbing under and around tank. Insure all fittings are properly installed to prevent leaking. Provide silicone caulking around joints as necessary for additional protection.
4. Consideration shall be given to providing overflow protection at sites where volume of precipitation may exceed storage volume of tank(s). Overflow protection shall be designed to protect against the potential for erosion.
5. Place the tank/cistern into the excavated area. Make sure the tank sits level in the hole and is evenly supported by the ground. Use a carpenter's level to check for level. Install the tank so the lip is above the surface of the ground by 2 inches to allow for a good fit of the tank's top.
6. Place the lid on the tank before backfilling and compacting soil around the tank. Place compacted soil around lid edge sloping away from the tank lid to provide a seal around the cistern on all sides.
7. Install steel ASTM 702 T-posts (1.33 lb/ft, 6' long) a minimum of 2' into ground. Temporarily support collection apron to desired angle and position. Attach collection apron to T-posts with 1/4"ø, 4' long, ASTM A307 U-bolts. Make sure the corrugations on the roofing material run perpendicular to the gutter location.
8. Pre-drill the gutter to accommodate the galvanized spacers and nails. Cut a 6-inch notch in the center of the gutter and bend the back of the notched section to form a tongue to provide drainage into the tank, or drill hole in the center of the gutter and install downspout.
9. Rake out any excess soil and remove all trash from site.

MINIMUM TANK/DRINKER SPECIFICATIONS

TANK SHALL BE FABRICATED FROM MATERIAL MEETING THE FOLLOWING SPECIFICATIONS:

1. High impact resistant polyethylene or fiberglass material
2. UV Stable
3. Rust Resistant
4. Non-toxic
5. Crack resistant during freezing temperature

		Date
Designed	T. Morales, PE	10/2011
Drawn	K. Yasumiishi	10/2011
Checked		
Approved		
Title		

DESIGN PARAMETERS

SMALL GAME WILDLIFE GUZZLER – SINGLE APRON

PRACTICE STANDARD: 636

JOB CLASS: _____ BASIN _____ COUNTY, OREGON

NRCS
Natural Resources Conservation Service
United States Department of Agriculture

File Name
or_sm_guzzler_single_tpost.dwg

Drawing No.
T-POST

Sheet 2 of 2

E:\cad_support\CAD Drawings\(c)Wildlife\or_sm_guzzler_single_tpost.dwg, 10/18/2011 12:10:41 PM