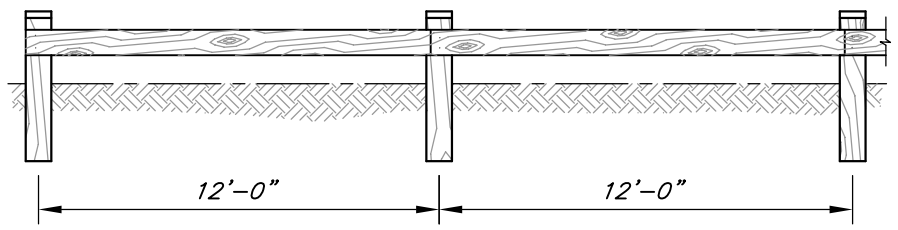

ELEVATION

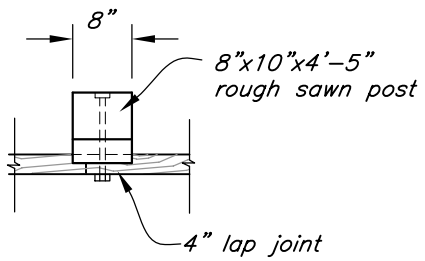

PLAN VIEW

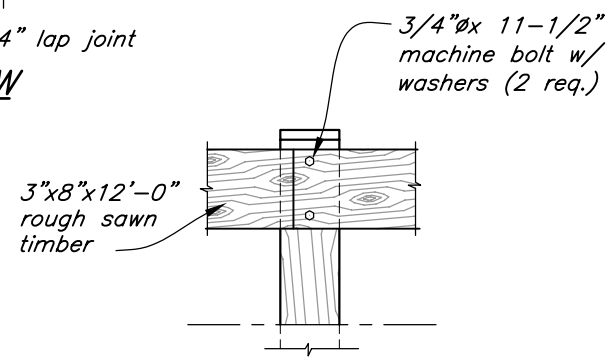

FRONT VIEW

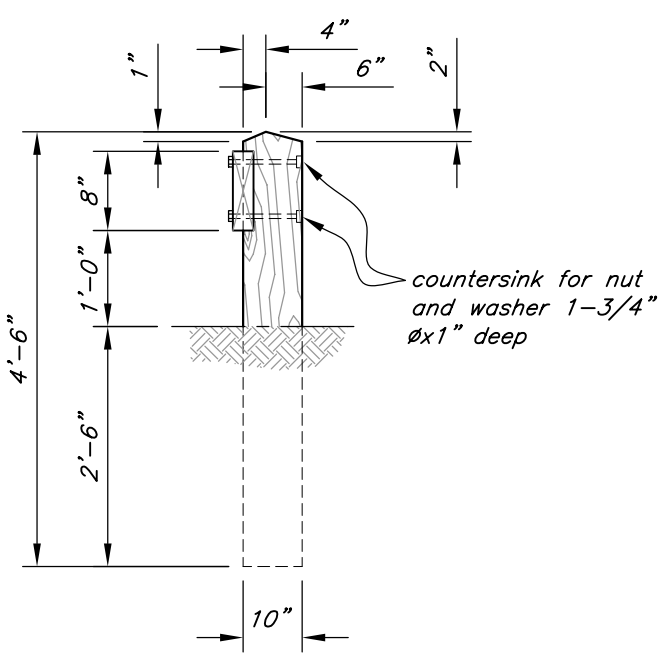

SIDE VIEW

TYPE 1 BARRIER

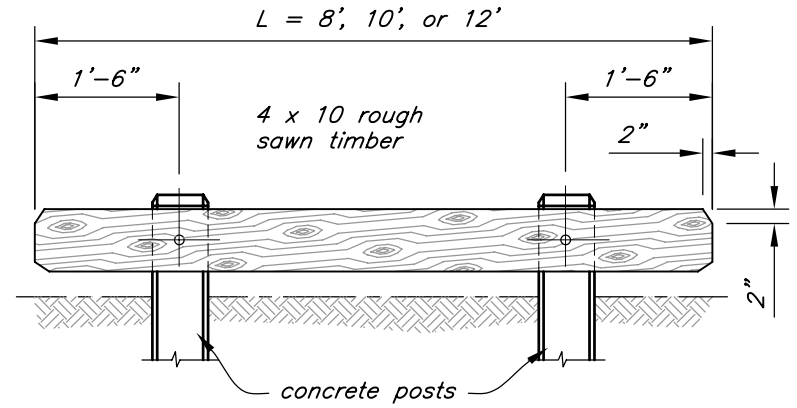

ELEVATION

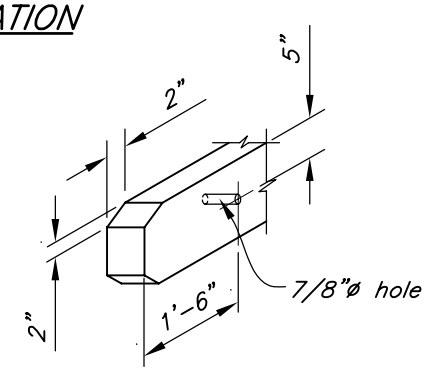

DETAIL

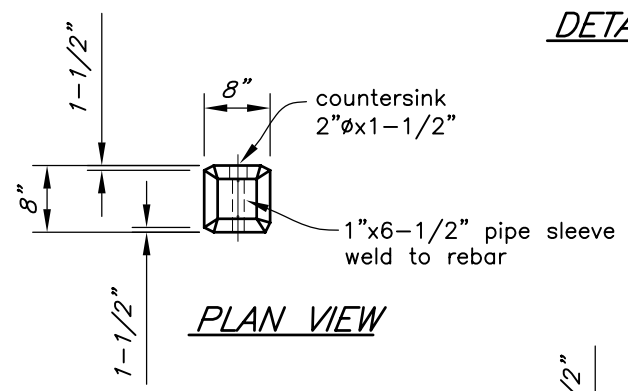

PLAN VIEW

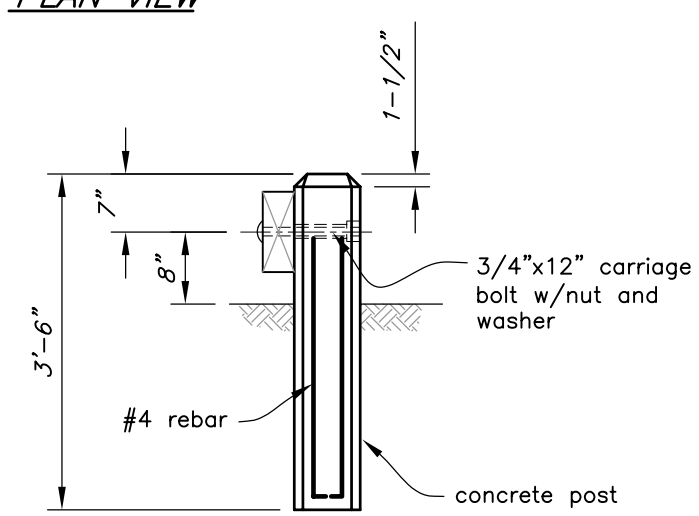

SIDE VIEW

TYPE 2 BARRIER

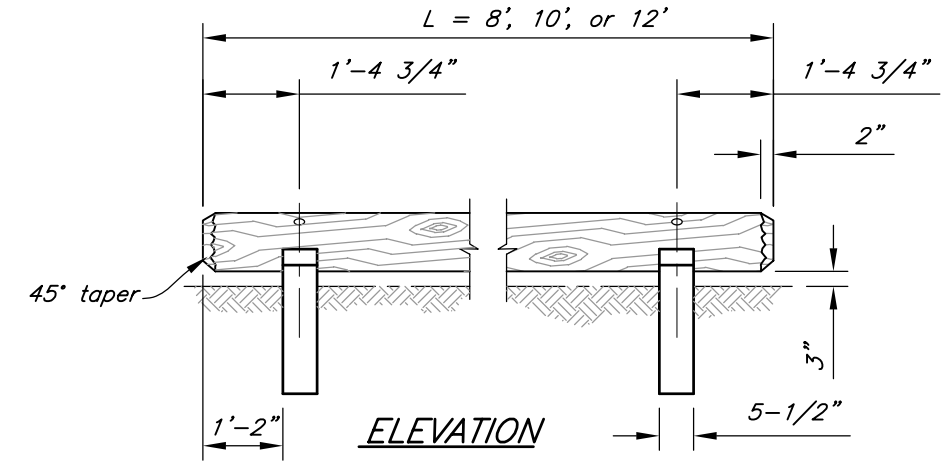

ELEVATION

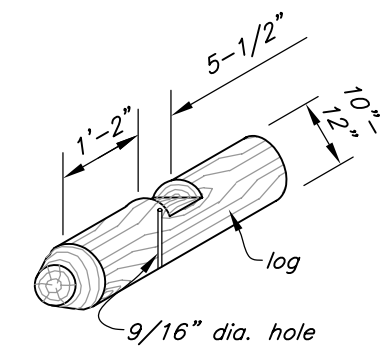

DETAIL

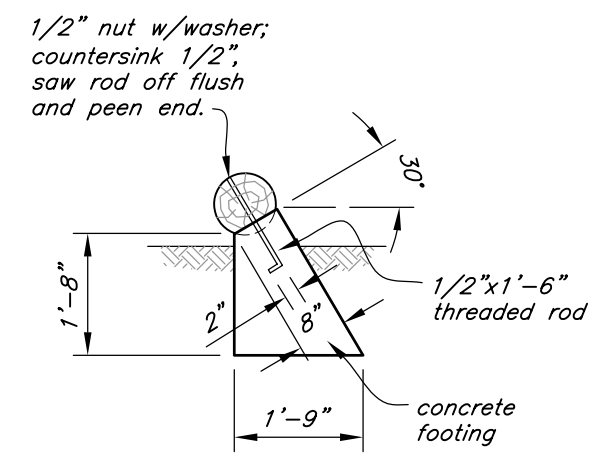

SECTION

TYPE 3 BARRIER

This drawing requires supporting technical documentation prior to use and must be adapted to the specific site.

Drwing not to scale.

Date	5/2006
Designed	
Drawn	KLY
Checked	
Approved	
Title	

TIMBER BARRIERS

NRCS
Natural Resources Conservation Service
United States Department of Agriculture

File Name
or_timber_barrier.dwg

Drawing No.

Sheet 1 of 1

C:\home\CAD Drawings\Standard Drawings - pending\Miscellaneous\or_timber_barrier.dwg, 5/22/2006 7:14:55 AM