Two rectangular water troughs shown. Use same plumbing details for single trough installation. For circular tank layout, see detail.

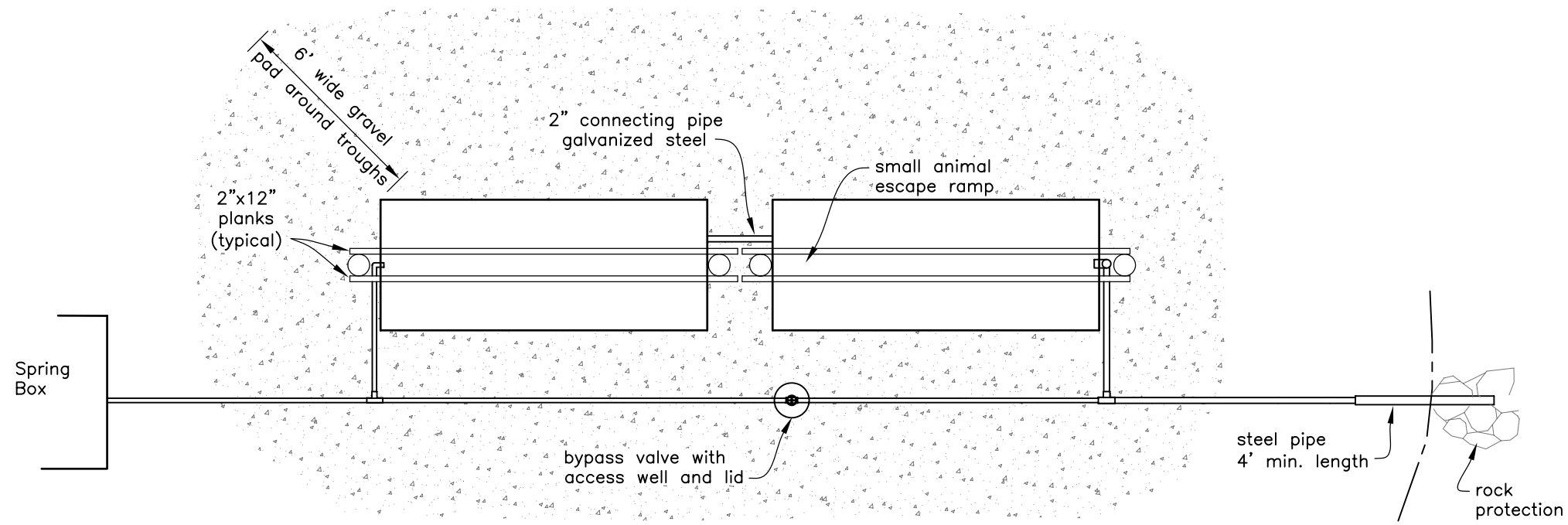

PLAN VIEW

locate outlet to stable, natural channel, away from troughs

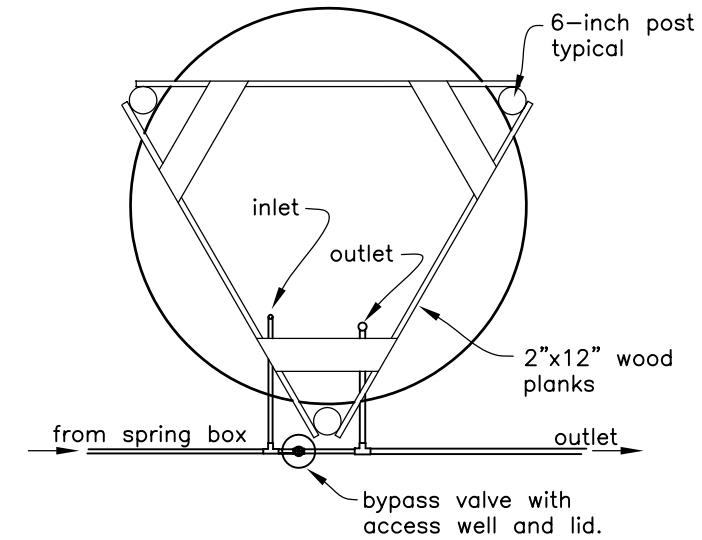

CIRCULAR TANK LAYOUT

Rectangular Tanks:

Capacity _____ gal

Dimensions _____ ft x _____ ft

Circular Tanks:

Capacity _____ gal

Diameter _____ in

Supply Line

Diameter _____ in

Length _____ ft

Drain Line:

Diameter _____ in

Length _____ ft

Spring Box Outlet Elev. _____

Water Elev. _____

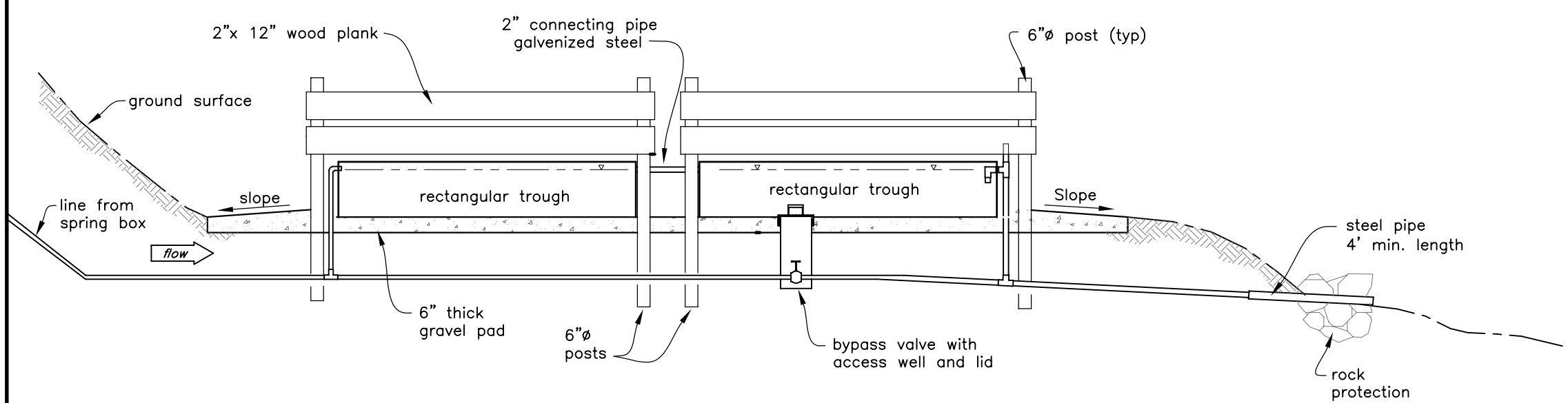

CROSS SECTION

This drawing requires supporting technical documentation prior to use and must be adapted to the specific site.

Drawing no to scale.

Designed
Drawn
Checked
Approved
Title
Date 8/05

TANK LAYOUT
FOR SLOPES LESS THAN 20 PERCENT

LIVESTOCK FACILITIES

NRCS
Natural Resources Conservation Service
United States Department of Agriculture

File Name
or_lsk_tank_layout
Drawing No.

Sheet of