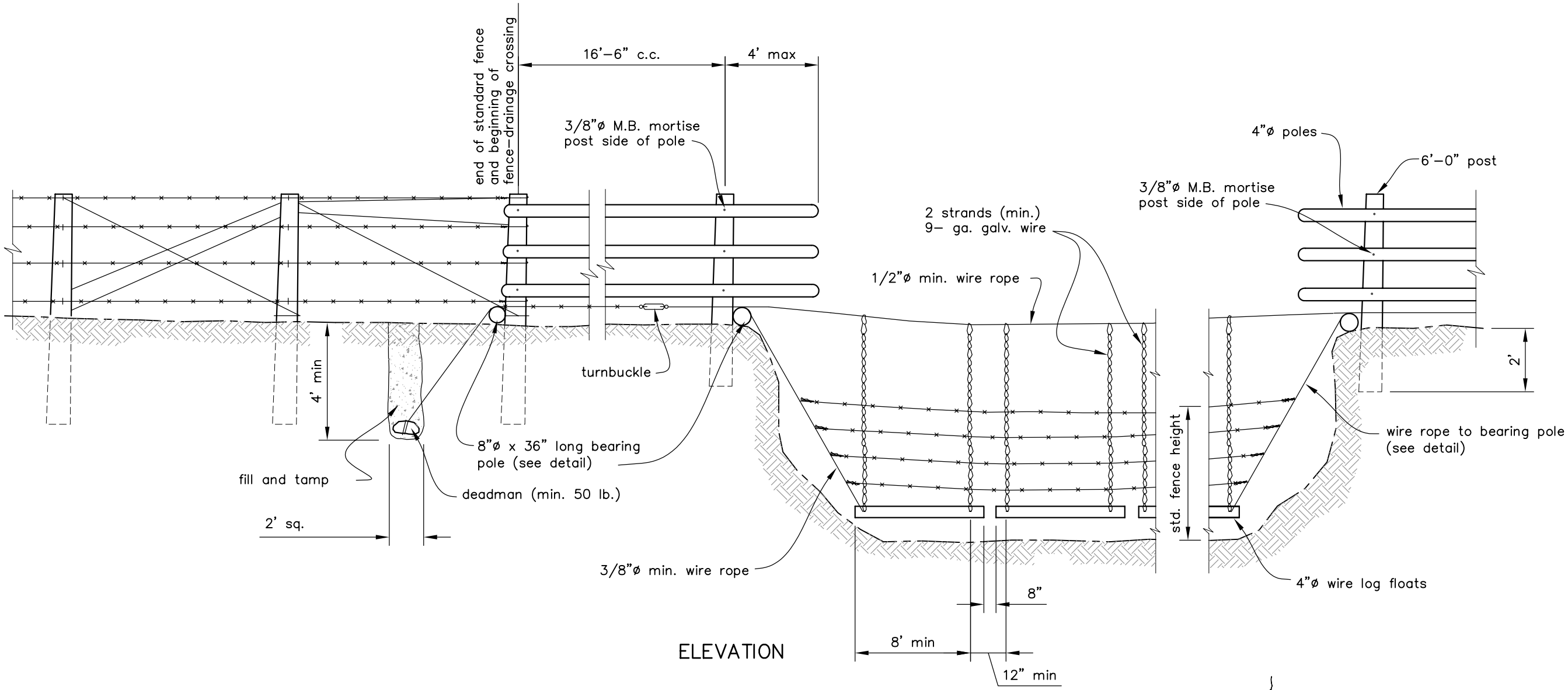

ELEVATION

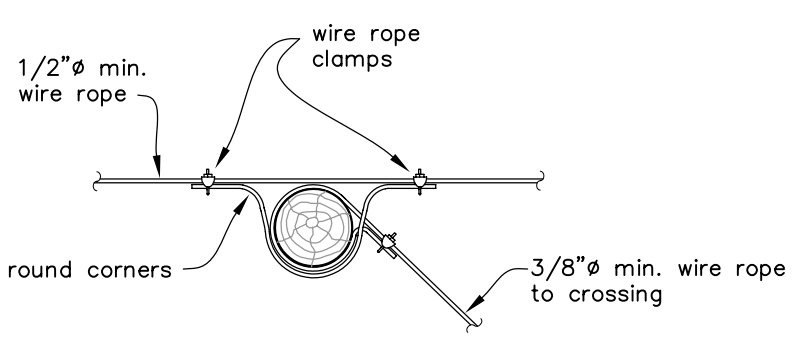

WIRE ROPE CONNECTION TO INTERMEDIATE BEARING POLE DETAIL

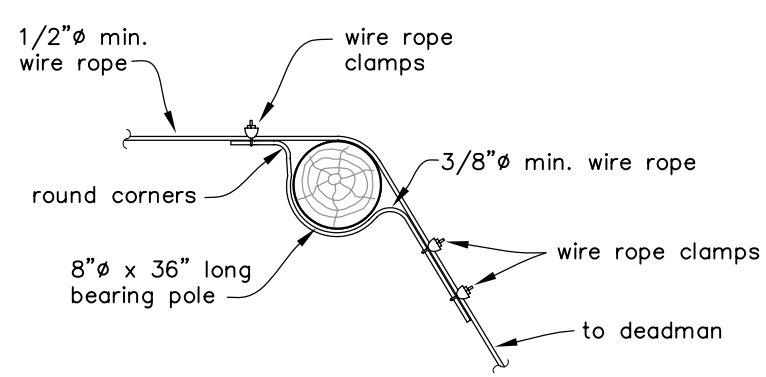

WIRE ROPE CONNECTION TO END BEARING POLE DETAIL

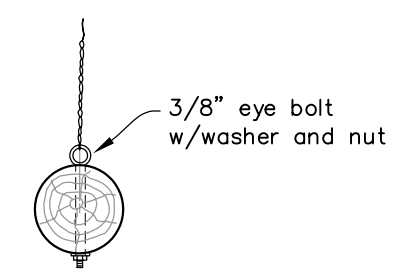

FLOAT LOG FASTENER

NOTES:
1. rough sawn 2x4's may be substituted for poles
2. place cable system on downstream side of fence.

This drawing requires supporting technical documentation prior to use and must be adapted to the specific site.

Drawing not to scale.

Date
Designed
Drawn 8/05
Checked
Approved
Title

FENCE DRAINAGE CROSSING WITH FLOAT LOG (TYPE C)

LIVESTOCK FACILITIES

NRCS
Natural Resources Conservation Service
United States Department of Agriculture

File Name
or_lsk_fencxing_c.dwg
Drawing No.
Sheet of