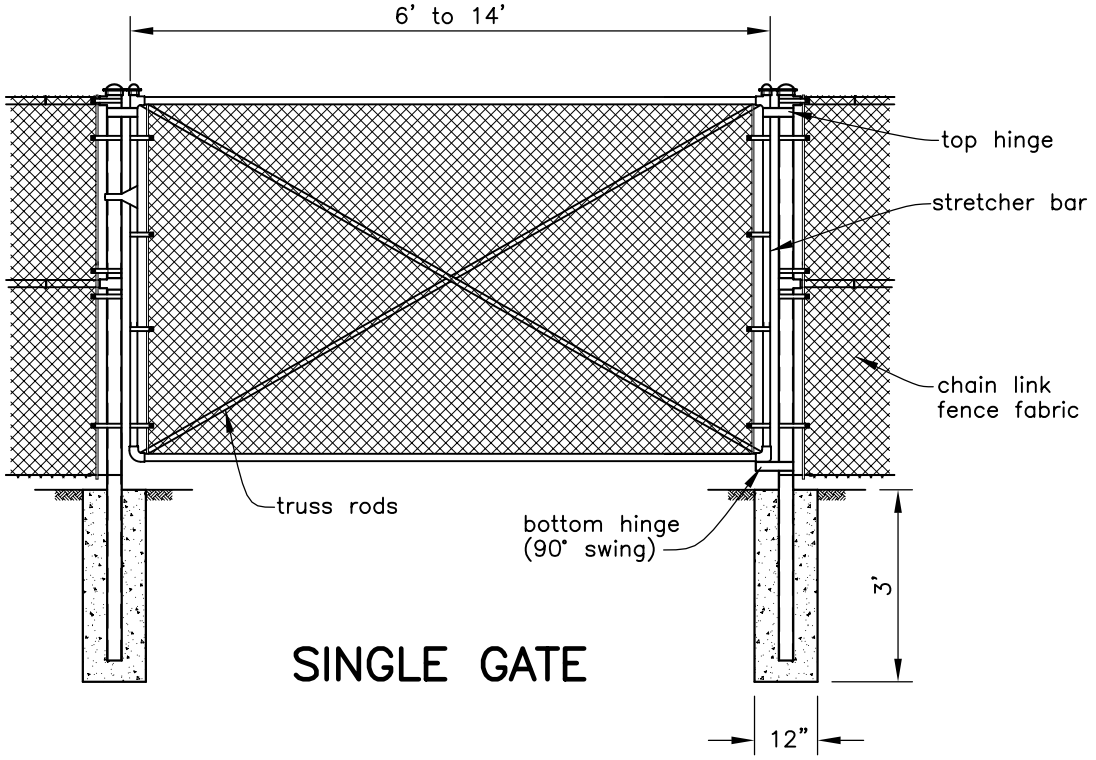

SINGLE GATE

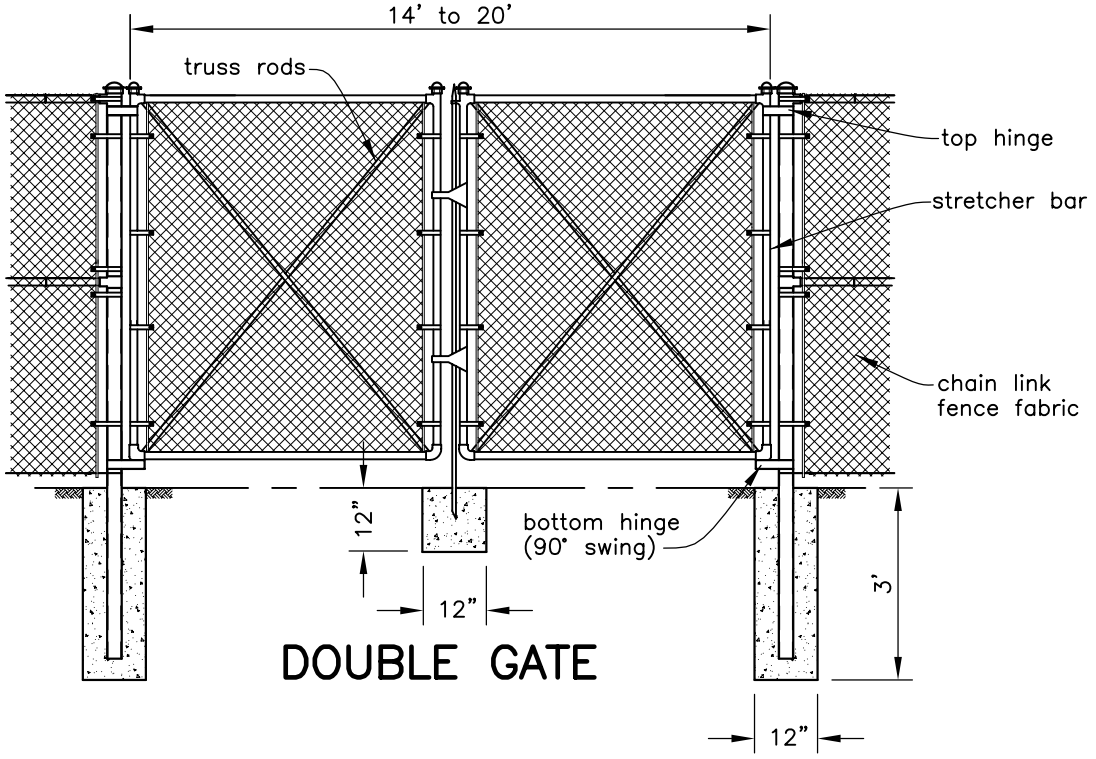

DOUBLE GATE

This drawing requires supporting technical documentation prior to use and must be adapted to the specific site.

Drawing not to scale.

	Date	CAD FILE NAME	CHAIN LINK FENCE GATES
Designed		OR_CHAINLINK_GATE.DWG	
Drawn	2/2005	DRAWING NO.	
Checked		SHEET OF	LIVESTOCK FACILITIES
Approved		NRCS U.S.D.A. NATURAL RESOURCES CONSERVATION SERVICE	