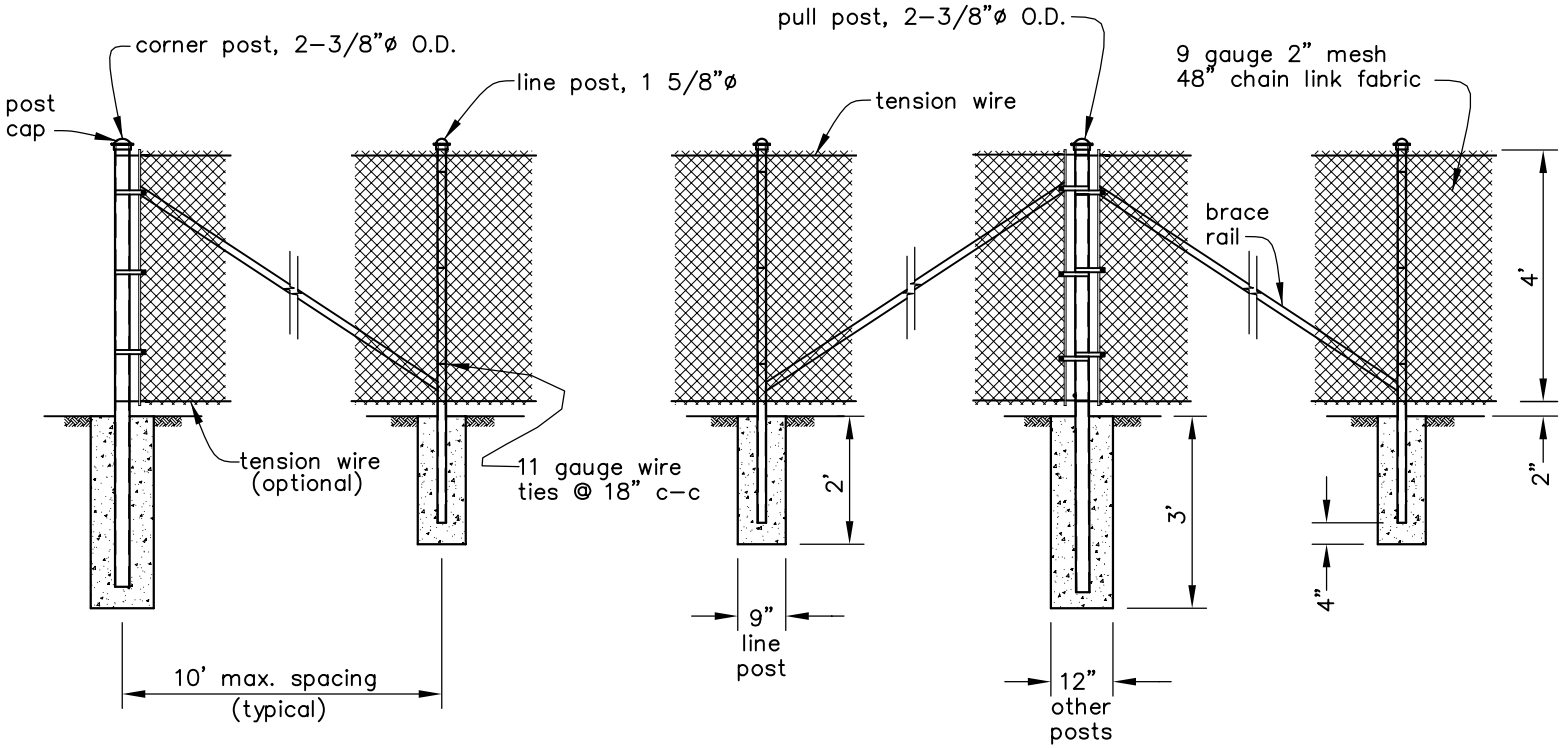


# ELEVATION VIEW

Concrete shall be class 3000. Concrete for line posts to be 9" min. diameter. Concrete for all other posts to be 12" min. diameter.

This drawing requires supporting technical documentation prior to use and must be adapted to the specific site.

Drawing not to scale.

Designed
Drawn
Checked
Approved

Date
2/2005

CAD FILE NAME
OR_CHAINLINK4.DWG
DRAWING NO.
SHEET OF

NRCS U.S.D.A. NATURAL RESOURCES CONSERVATION SERVICE

# CHAIN LINK FENCE

LIVESTOCK FACILITIES