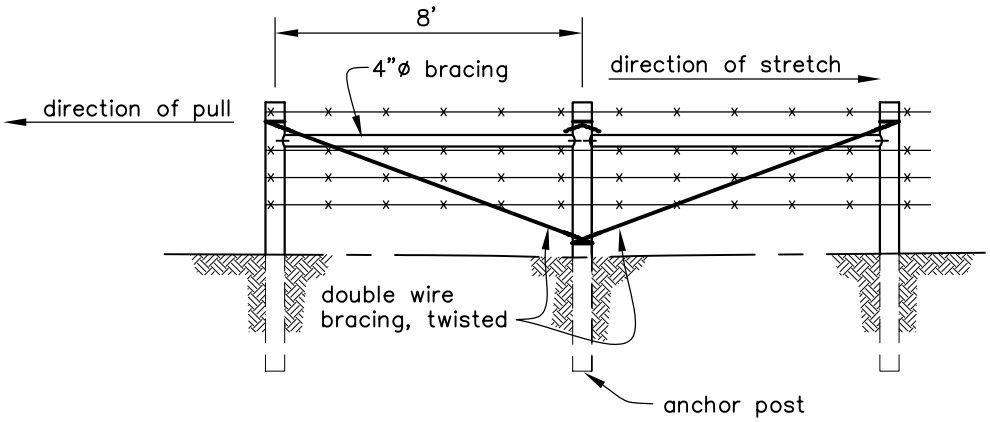

LINE BRACE

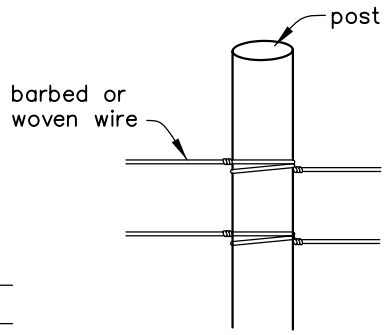

DETAIL

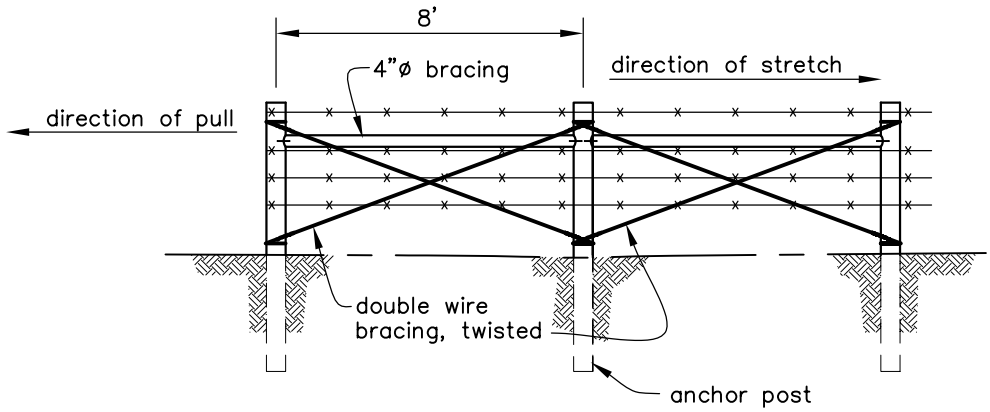

LINE BRACE

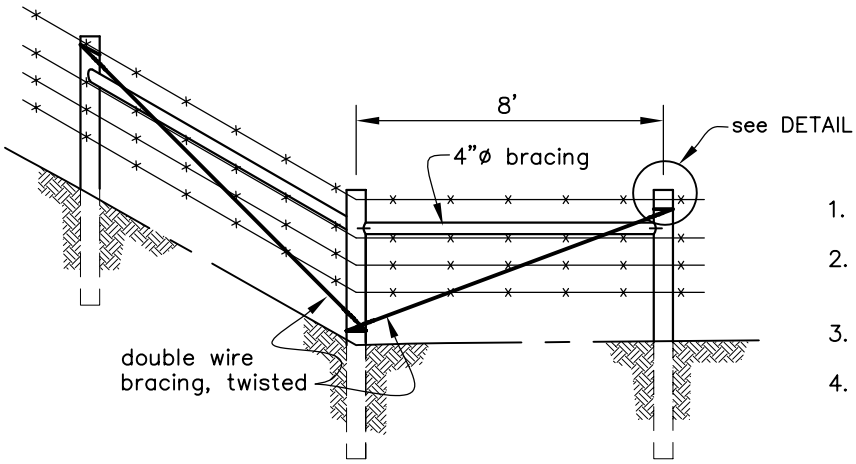

1. Double wrap all bracing.
2. All brace posts to be 7' long, 3' embedment.
3. Dap braces into posts.
4. Spike braces to posts.

CORNER BRACE

This drawing requires supporting technical documentation prior to use and must be adapted to the specific site.

Drawing not to scale.

	Date	CAD FILE NAME	WIRE FENCE BRACES
Designed		OR_WIREBRACE3.DWG	
Drawn	2/2005	DRAWING NO.	
Checked		SHEET OF	LIVESTOCK FACILITIES
Approved		NRCS U.S.D.A. NATURAL RESOURCES CONSERVATION SERVICE	