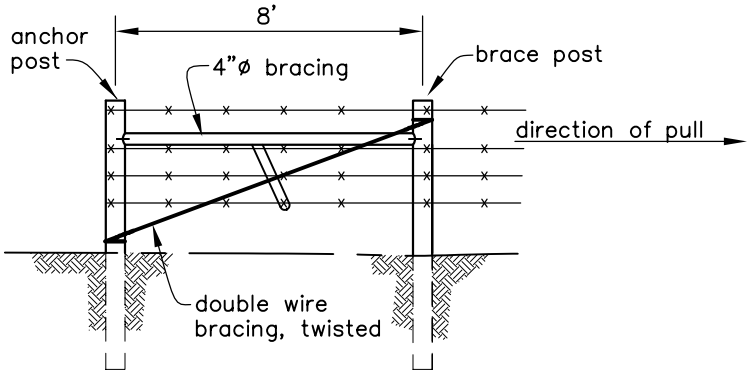


# 1–SPAN END

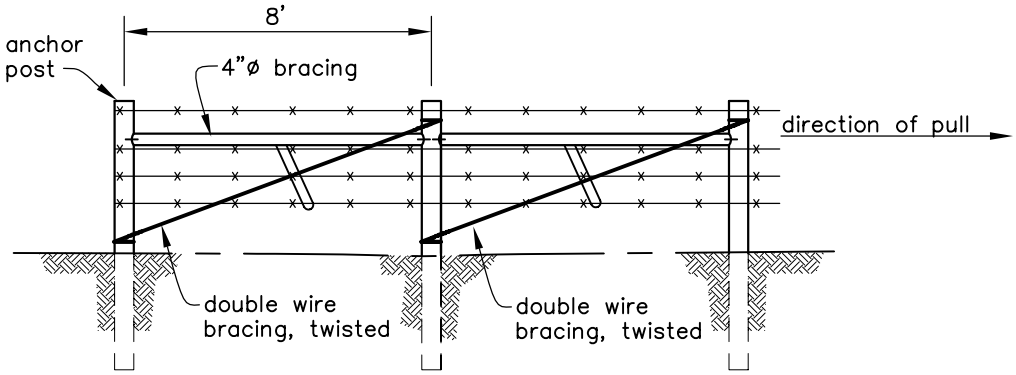


# 2–SPAN END

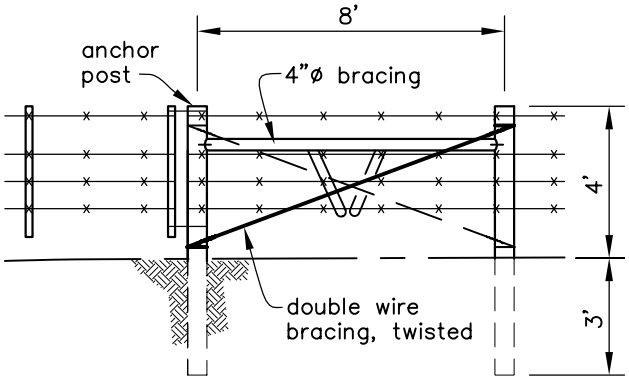


# GATE BRACE

1. Double wrap all bracing.
2. All brace posts to be 7' long, 3' embedment.
3. Dap braces into posts.
4. Spike braces to posts.

This drawing requires supporting technical documentation prior to use and must be adapted to the specific site.

Drawing not to scale.

| | Date | CAD FILE NAME | WIRE FENCE BRACES |
|---|---|---|---|
| Designed | | OR_WIREBRACE2.DWG | |
| Drawn | 2/2005 | DRAWING NO. | |
| Checked | | SHEET OF | LIVESTOCK FACILITIES |
| Approved | | NRCS U.S.D.A. NATURAL RESOURCES CONSERVATION SERVICE | |