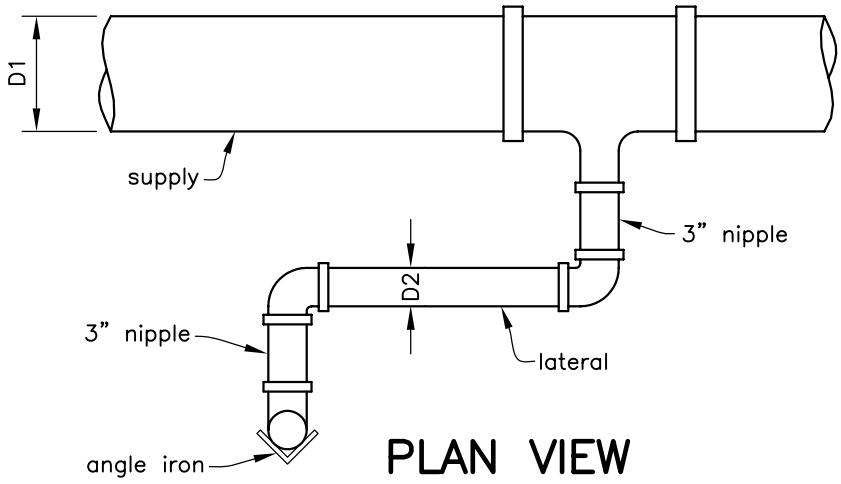

PLAN VIEW

DIMENSIONS

D1 = _____ (in)

D2 = _____ (in)

H = _____ (ft)

Discharge _____ gpm

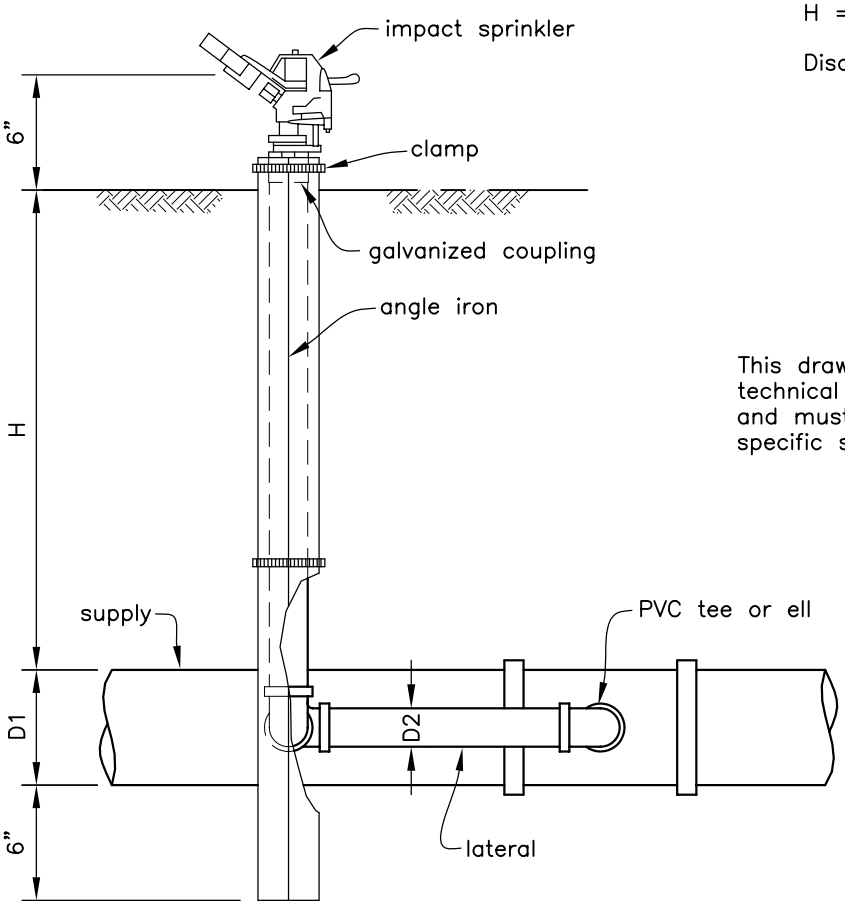

ELEVATION

This drawing requires supporting technical documentation prior to use and must be adapted to the specific site.

Drawing not to scale.

	Date	CAD FILE NAME	RISER FOR IMPACT SPRINKLER
Designed		OR_RISER_IMPACT.DWG	
Drawn	2/2005	DRAWING NO.	
Checked		SHEET OF	IRRIGATION
Approved		NRCS U.S.D.A. NATURAL RESOURCES CONSERVATION SERVICE	