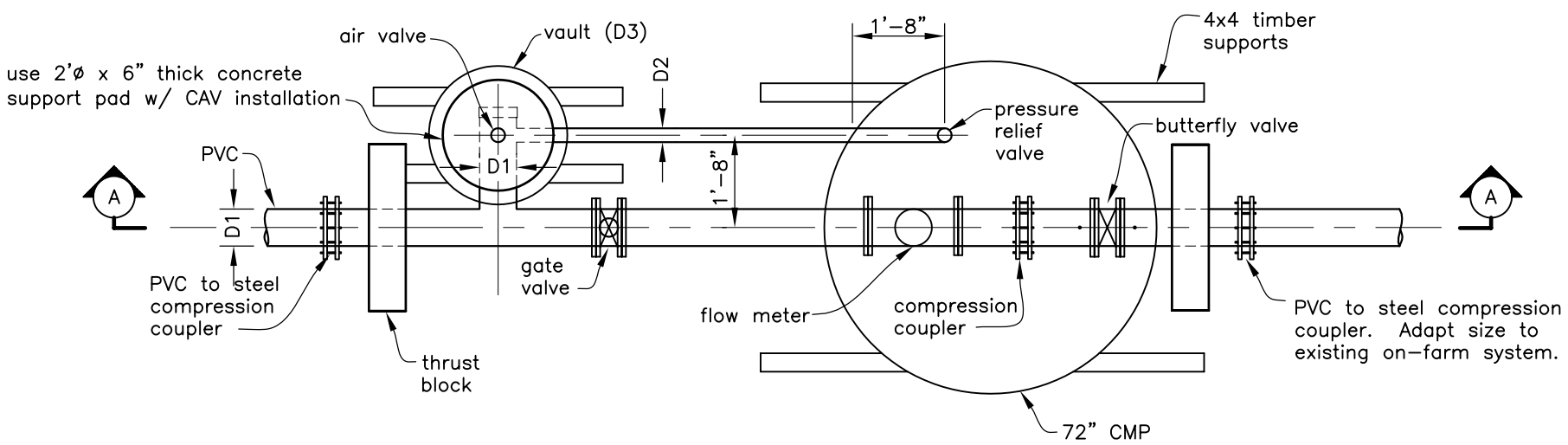

IRRIGATION OUTLET PLAN VIEW

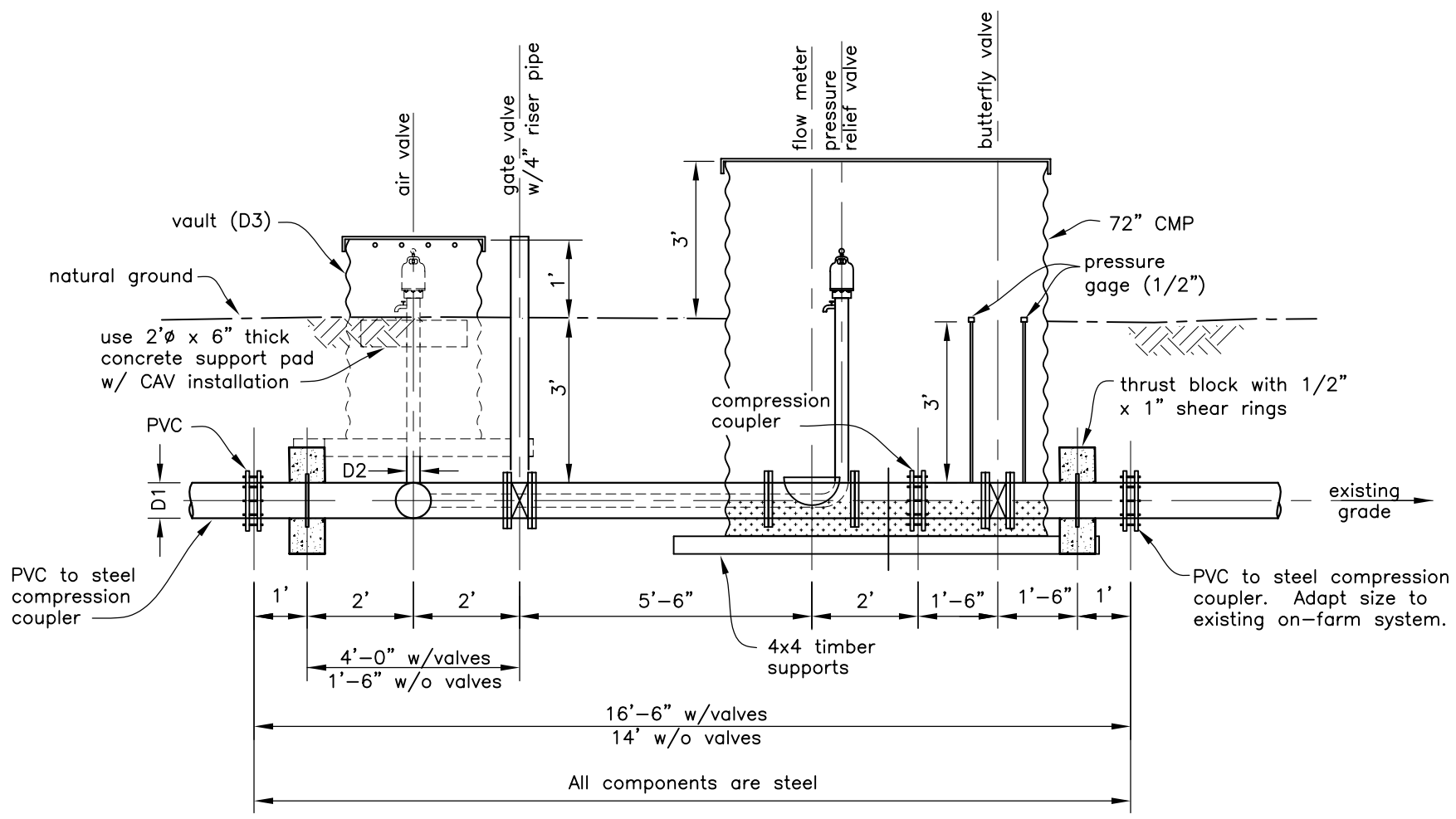

IRRIGATION OUTLET SECTION A

DIMENSIONS

D1 (main) = _____ inches

D2 (riser) = _____ inches

D3 (vault) = _____ inches

This drawing requires supporting technical documention prior to use and must be adapted to the specific site.

Drawing not to scale.

Designed
Drawn
Checked
Approved
Title
Date 10/05

IRRIGATION OUTLET DETAILS

IRRIGATION

NRCS
Natural Resources Conservation Service
United States Department of Agriculture

File Name
or_irr_outlet.dwg
Drawing No.
Sheet of