S:\NRCSstateoffice\Technology\Engineering\OREGON JOB FOLDER\CAD Support\CAD Drawings\Animal Waste\Tank\or_awm_rc_pumpsump.dwg, 5/23/2005 10:58:39 A

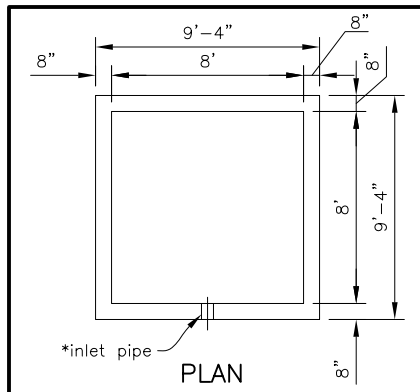

PLAN

*Optional: Form hole for inlet pipe. Diameter and location to be determined at site.

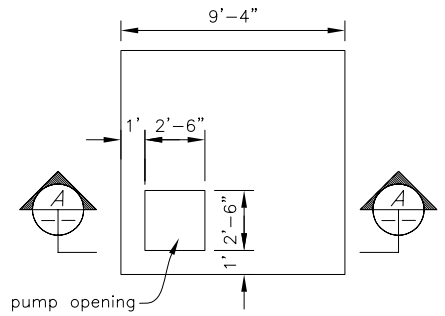

PLAN COVER SLAB

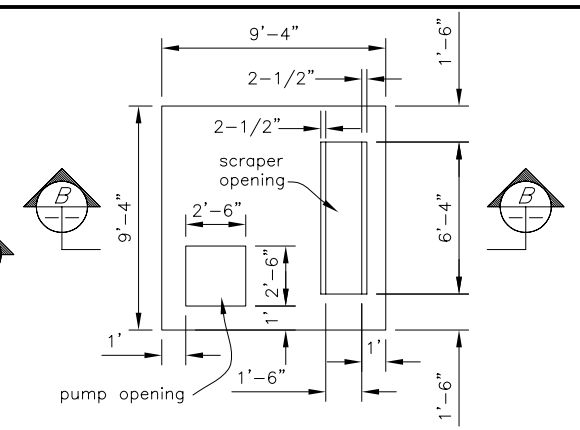

PLAN – OPTIONAL COVER SLAB

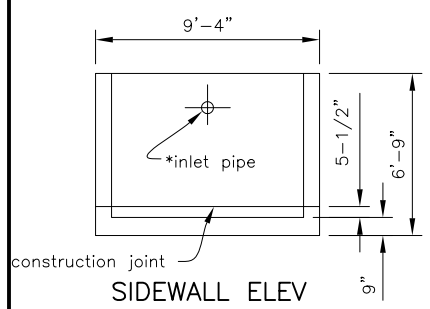

SIDEWALL ELEV

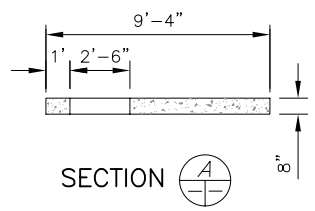

SECTION A

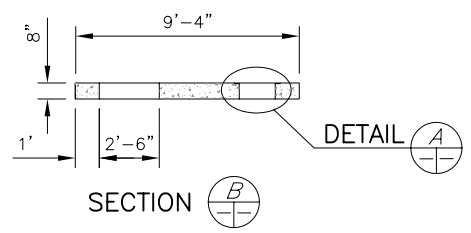

SECTION B

MANURE TANK LAYOUT

1 0 8
Scale in feet

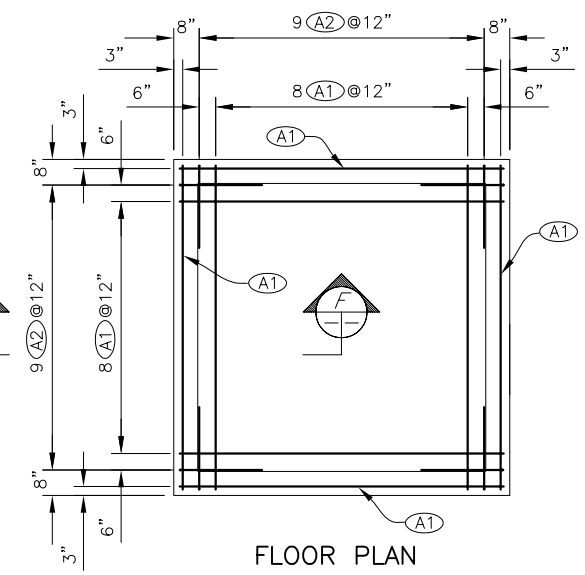

FLOOR PLAN

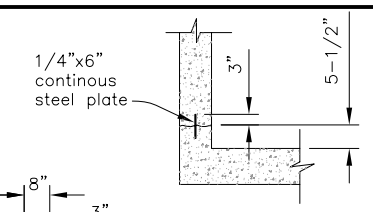

CONSTRUCTION JOINT DETAIL

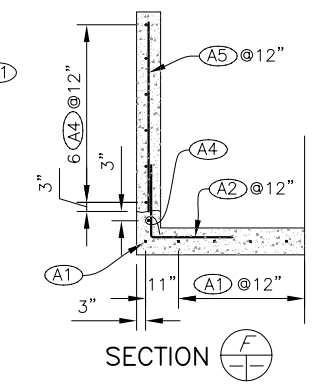

SECTION F

STEEL SCHEDULE

MARK	SIZE	QUAN.	LENGTH	TYPE	B	C	TOTAL
A1	#4	20	9'-0"	1			180'-0"
A2	#5	36	4'-3"	21	2'-0"	2'-3"	153'-0"
A3	#5	28	5'-0"	21	2'-6"	2'-6"	140'-0"
A4	#4	28	6'-3"	1			175'-0"
A5	#4	36	5'-3"	1			189-0"
B1	#5	20	9'-0"	1			180'-0"
B2	#5	6	5'-6"	1			33'-0"
B3	#5	2	4'-0"	1			8'-0"
B4	#5	4	2'-0"	1			8'-0"
C1	#6	12	9'-0"	1			108'-0"
C2	#6	7	5'-6"	1			38'-6"
C3	#6	4	4'-6"	1			18'-0"
C4	#6	4	2'-0"	1			8'-0"
C5	#6	4	2'-9"	1			11'-0"
C6	#6	4	0'-8"	1			2'-8"
C7	#6	7	6'-6"	1			45'-6"
C8	#6	3	3'-0"	1			9'-0"

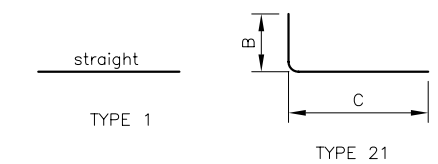

BAR TYPES

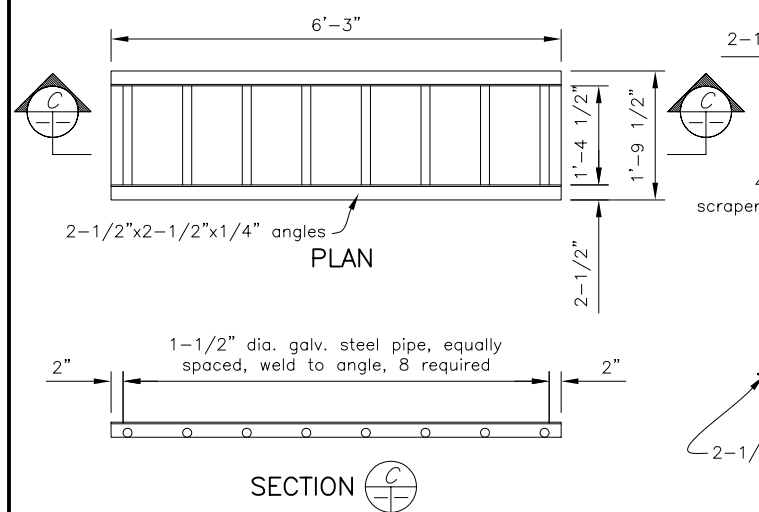

PLAN

SECTION C

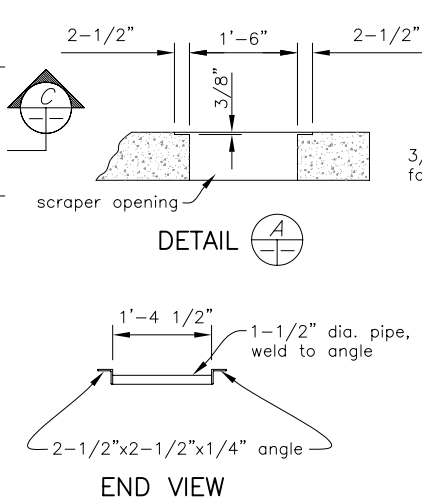

DETAIL A

END VIEW

SCRAPER FRAME DETAILS

1 0 2
Scale in feet

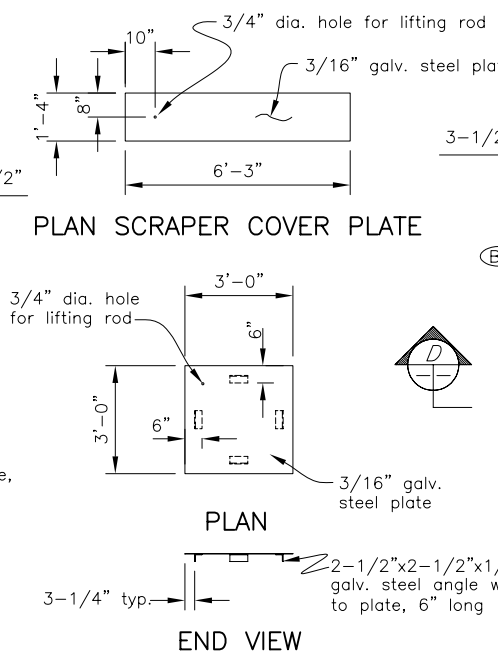

PLAN SCRAPER COVER PLATE

PLAN

END VIEW

PUMP OPENING COVER PLATE

1 0 1 3
SCALE IN FEET

QUANTITIES FOR TANK & COVER SLAB

Steel Reinforcement
#4 Bar____544.00 feet____363.4 pounds
#5 Bar____522.00 feet____544.4 pounds
Total 907.8 pounds
Concrete_____9.53 cu.yds.
Steel cover plate_____69.0 pounds

QUANTITIES FOR OPTIONAL COVER & TANK

Steel Reinforcement
#4 Bar____544.00 feet____363.4 pounds
#5 Bar____293.00 feet____305.6 pounds
#6 Bar____240.67 feet____361.5 pounds
Total 1030.5 pounds
Concrete_____9.29 cu.yds.
Steel cover plate_____69.0 pounds
Steel cover plate (Scraper)____64.5 pounds
Steel scraper frame_____88.6 pounds

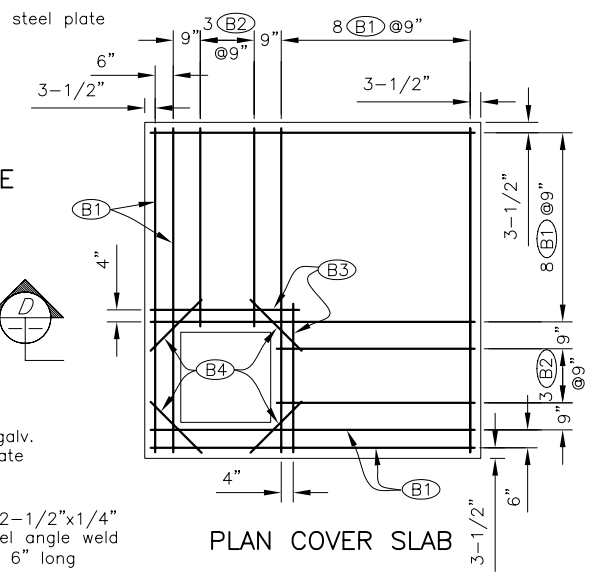

PLAN COVER SLAB

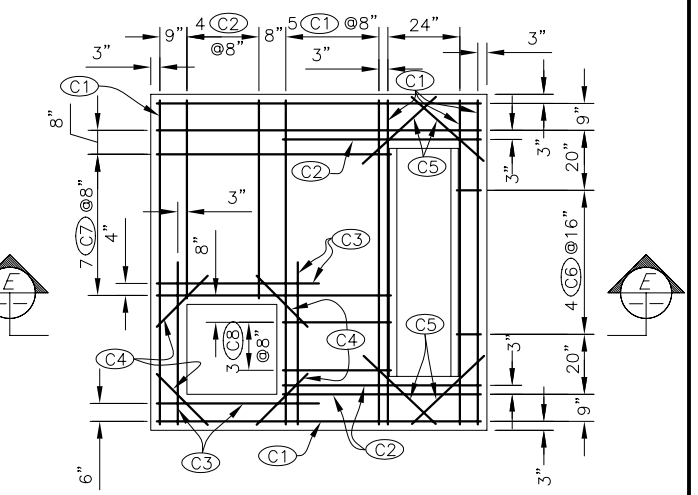

PLAN–OPTIONAL COVER SLAB

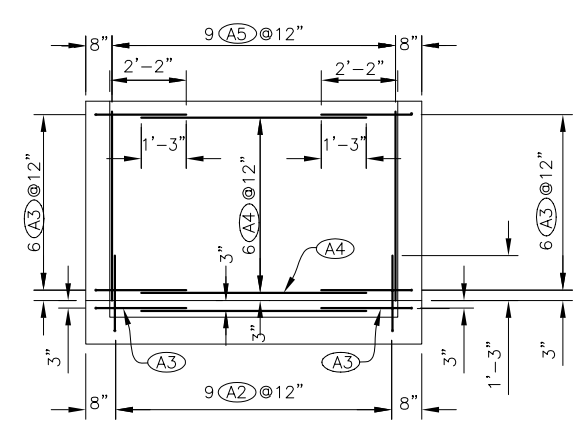

SIDEWALL ELEVATION

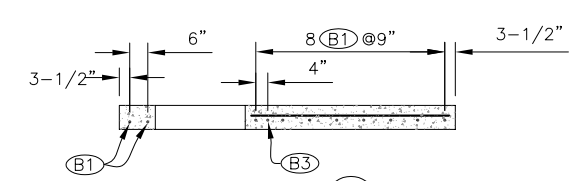

SECTION D

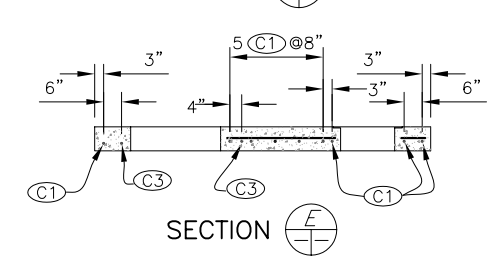

SECTION E

MANURE TANK REINFORCEMENT DETAILS

1 0 3
SCALE IN FEET

GENERAL NOTES

1. All concrete shall be Class 3500.
2. Bar splices shall be lapped a minimum of 30 bar diameters, but not less than 12 inches.
3. Dimensions from face of concrete to reinforcing bar designated the clear distance.
4. Exposed concrete edges shall be chamfered 3/4 inches.
5. The tank is designed for a medium (minimum of 20 years) service life in accordance with National Conservation Practice Standard 313 dated October 1980.
6. SAFETY FIRST–cover pump and scraper openings when not in use.

DESIGN LOADS

1. Walls–110 psf/EFP plus 100 psf surcharge.
2. Cover slab–5000lb. wheel load.
3. Maximum allowable water table is to the top of the tank based on a factor of safety of 1.0 for buoyancy check considering the tank is empty with cover in place

DESIGN VALUES

Concrete

f_1 = 3,500
f_c = 1,400
Vc = 65 psi

Steel

fs = 20,000 psi
min t & s = 0.0020 bt

Date
Designed NRCS (Portland, OR) 1/1981
Drawn
Checked Roy Bright
Approved 1/1981
Title State Conservation Engineer

RECTANGULAR BELOW GROUND R/C PUMP SUMP

NRCS
Natural Resources Conservation Service
United States Department of Agriculture

Job Class
Practice Code

File Name
or_awm_rc_pumpsump.dwg
Drawing No.

Sheet 1 of 1