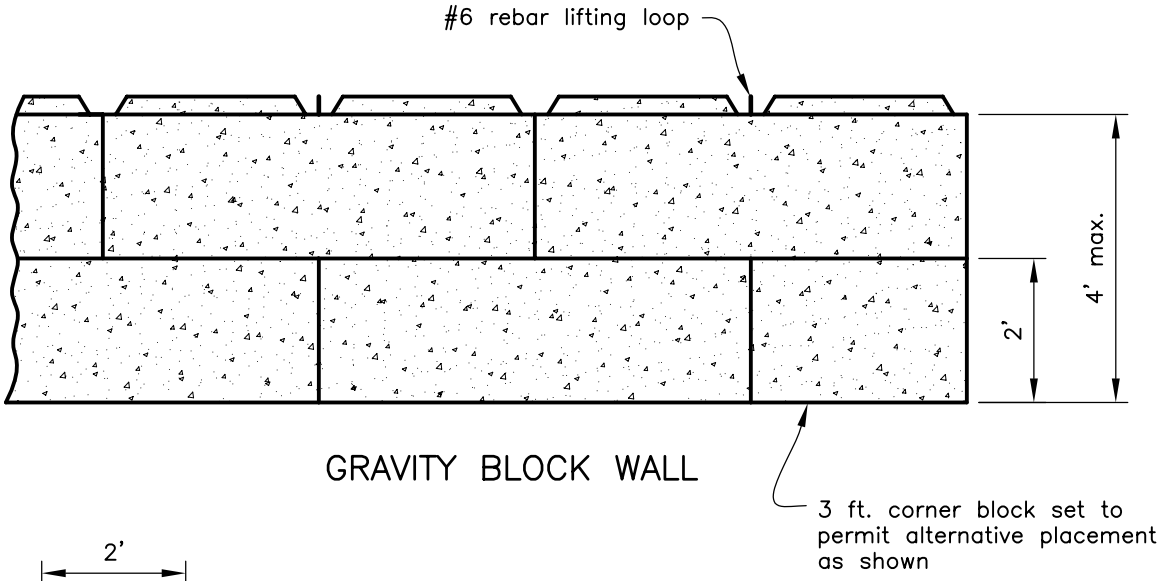

GRAVITY BLOCK WALL

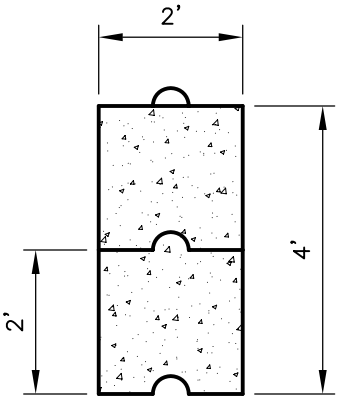

END VIEW

This drawing requires supporting technical documentation prior to use and must be adapted to the specific site.

GRAVITY BLOCK WALL

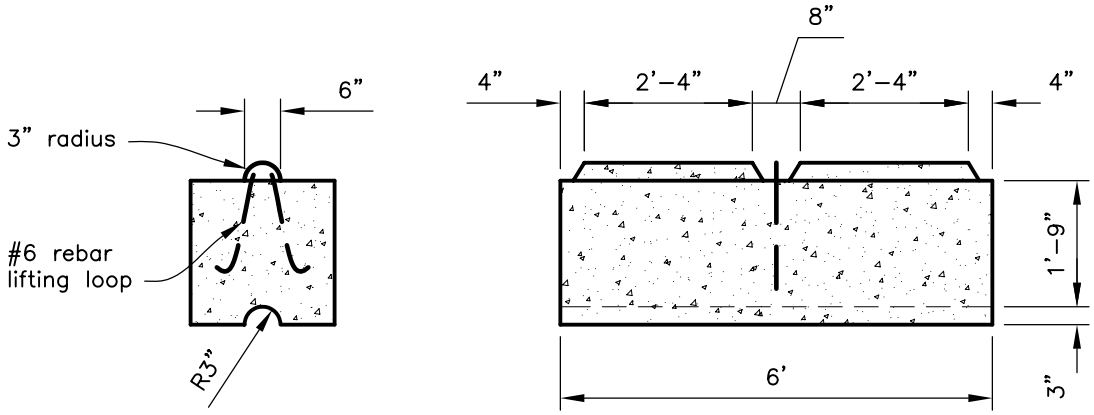

END VIEW

SIDE VIEW

GRAVITY BLOCK DETAIL

Drawing not to scale.

	Date	CAD FILE NAME	GRAVITY BLOCK WALL
Designed		or_gravityblock_wall.dwg	
Drawn	3/2005	DRAWING NO.	
Checked		SHEET OF	ANIMAL WASTE
Approved		NRCS U.S.D.A. NATURAL RESOURCES CONSERVATION SERVICE	