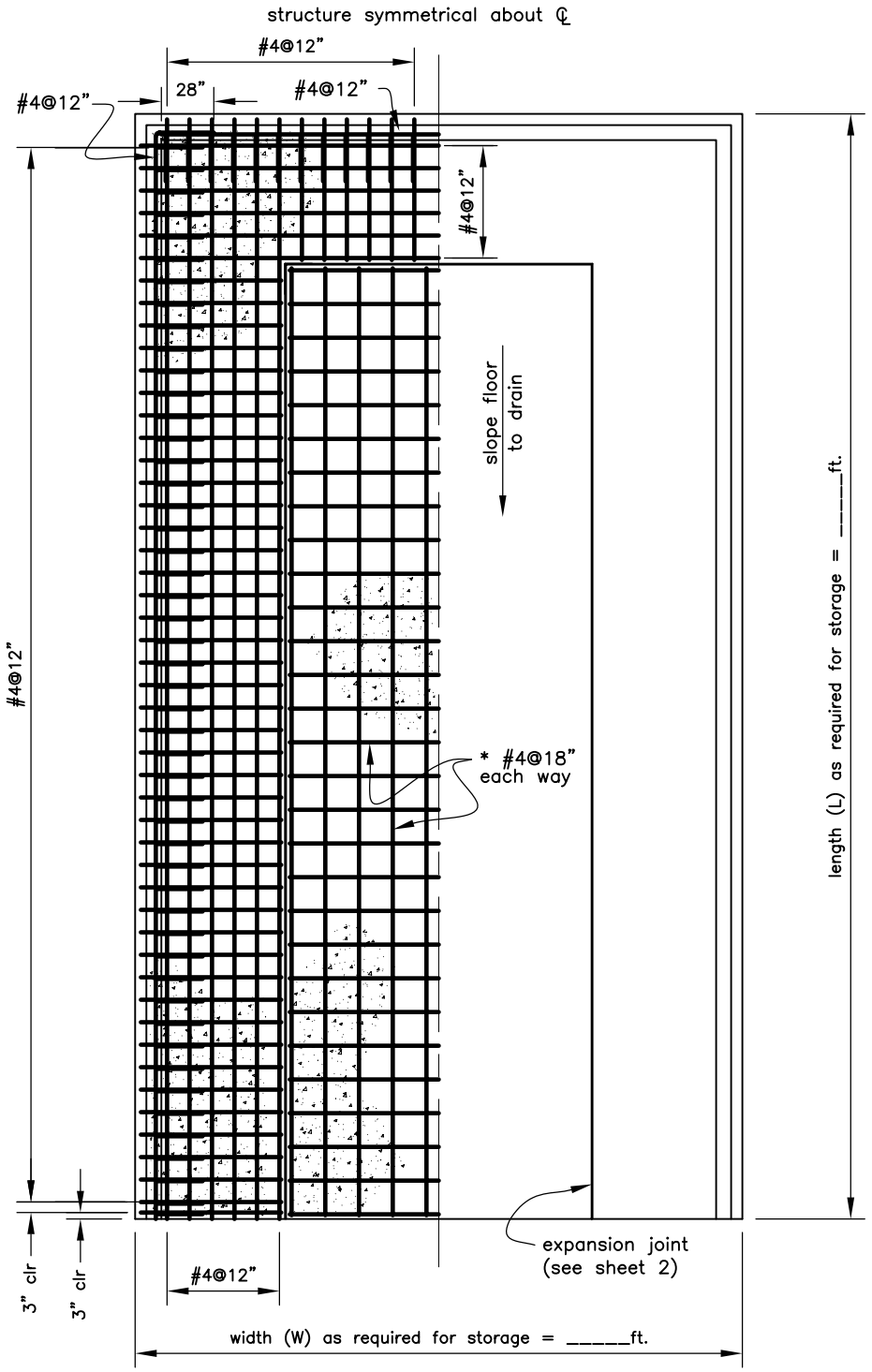

FLOOR PLAN

1 0 8
Scale in feet

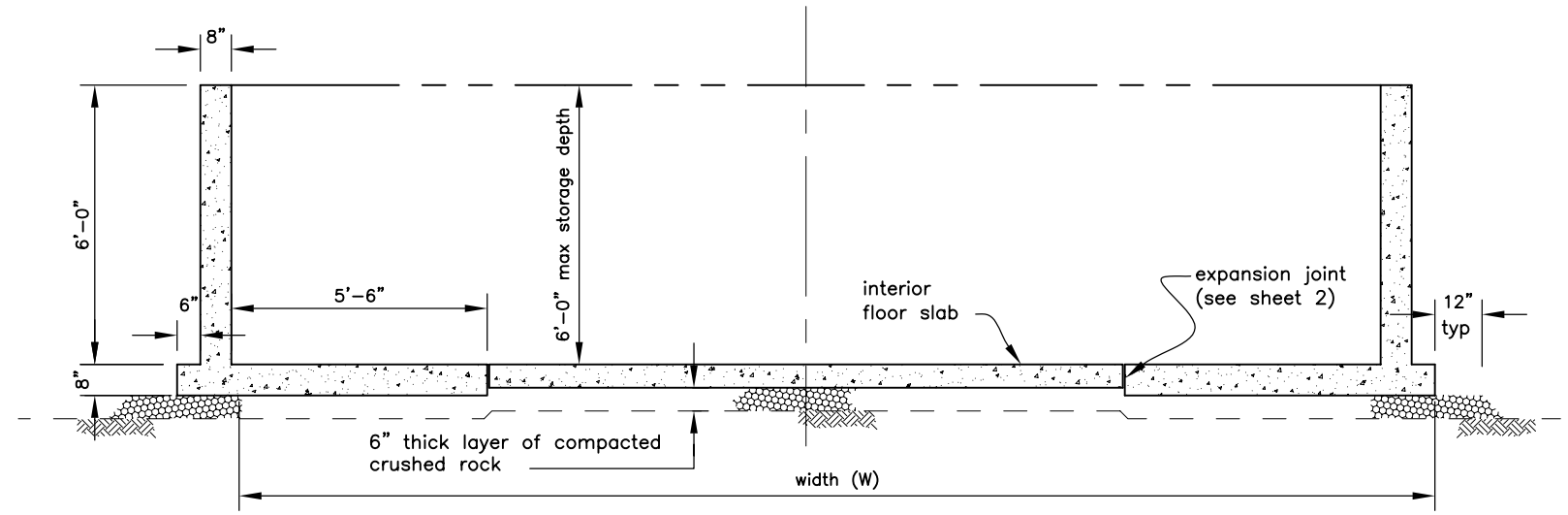

TYPICAL SECTION

(STEEL NOT SHOWN)

1 0 4
Scale in feet

* NOTES:

1. Expansion joints shall be provided at 75 ft. centers or closer (in each direction) where #4's @ 18 in are used.
2. A single mat of WWF 6 x 6 – W1.4 x W1.4 (6 x 6 in – 10 x 10 gage) welded wire fabric may be used in lieu of #4's @ 18 in where expansion joints are provided at 30 ft. centers or closer (in each direction).
3. Minimum splice length for welded wire fabric is 8 in.
4. If welded wire fabric is used, the thickness of the interior floor slab may be reduced to 5 in.

GENERAL NOTES

1. NRCS makes no representation as to the existence or nonexistence of utilities. It is the responsibility of the Contractor to comply with the provisions of ORS 757.541 to 757.571. The Contractor will be liable for any damage resulting from disruption of service caused by construction activities.
2. The foundation area shall be stripped of all vegetation, manure, or other unsuitable materials prior to installation of the structure. Stripped materials shall be disposed of in a manner such that sediment pollution is minimized.
3. The construction site shall be cleaned of all waste materials and debris following construction.

STRUCTURAL NOTES:

1. All exposed concrete edges and corners to be rounded or chamfered 1 inch.
2. Spacing of reinforcement bars is measured center to center of bars. Bar cover is clear distance between surface of bar and face of concrete and unless otherwise shown is 2 inches from formed and top surfaces and 3 inches for surfaces against the earth.
3. In sections having one mat of reinforcement, the steel shall be placed in the center of the section unless otherwise shown.

STANDARDIZED DESIGNS—MUST BE ADAPTED TO THE SPECIFIC SITE

Practice Code _____ Job Class _____

		Date
Designed	B. Doerge, B. Wilson	2/93
Drawn	kyasumiishi	2/93
Checked		
Approved	Roy Bright	12/95
Title	State Engineer	

WASTE STACKING FACILITY
ABOVE GROUND
6' WALL HEIGHT – 6' MAXIMUM STORAGE DEPTH

NRCS
Natural Resources Conservation Service
United States Department of Agriculture

File Name
OR_AWS_ABOVE_6H6D.DWG

Drawing No.

Sheet 1 of 2

C:\home\CAD Drawings\(c)Animal_Waste1206\Dry_Stack\or_awm_above_6h6d.dwg, 9/18/2007 2:12:21 PM, Adobe PDF

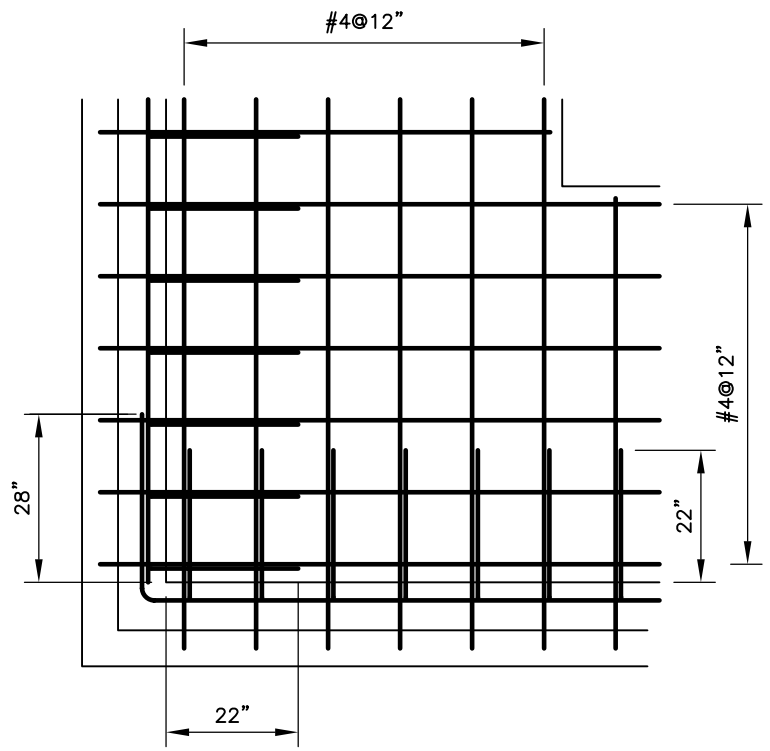

(PLAN VIEW)

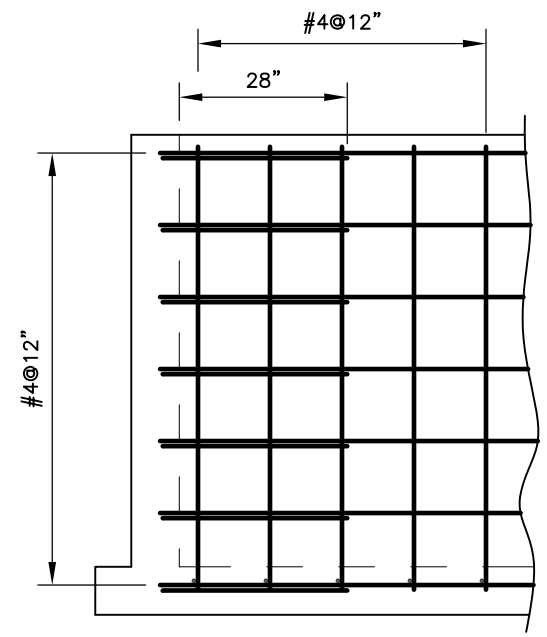

(ELEVATION VIEW)

CORNER DETAIL

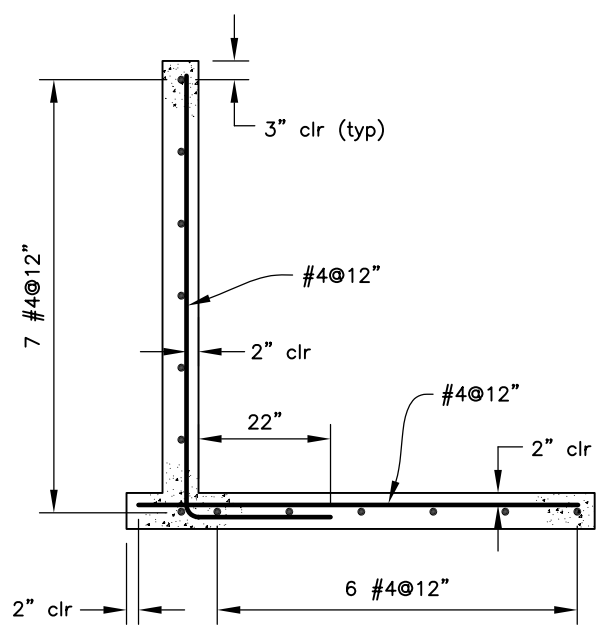

TYPICAL SECTION OF SIDEWALL

(CORNER DETAILS NOT SHOWN)

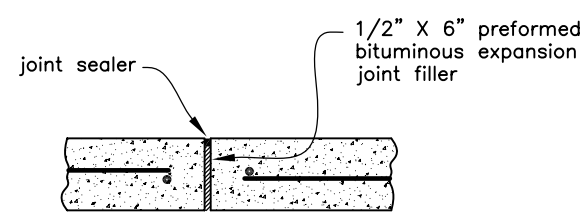

EXPANSION JOINT DETAIL

1 0 2
Scale in feet

CONCRETE SPECIFICATIONS:

1. The concrete shall be proportioned, transported, and placed in accordance with Specifications for Structural Concrete for Buildings – ACI 301–89. The concrete shall have a minimum compressive strength at 28 days of 3000 psi. Minimum cement content shall be 6 bags/cy and minimum net water content shall be 7 gallons/sack. the slump shall be 2 to 4 inches and the air content shall be 5 to 8% of the volume of concrete.
2. Forms shall be mortar tight, substantial and unyielding and shall be constructed so that the finished concrete will conform to the specified dimensions. Metal ties within the forms shall be equipped with a device that permits their removal to a depth of at least 1 inch without injury to the concrete.
3. The concrete shall be deposited as closely as possible to its final position in the forms and shall be worked into the corners and angles of the forms and around all reinforcement. Immediately after placement concrete shall be consolidated by vibrating.
4. Surfaces of all construction joints shall be cleaned by washing and scrubbing with a wire brush or broom.
5. Forms shall not be removed before 24 hours have elapsed after placement of concrete.
6. Holes produced by the removal of form ties, cone bolts, etc., shall be cleaned, wetted, and filled with dry pack mortar. Cone bolt holes may also be filled with pre–molded plugs set in epoxy.
7. Concrete shall be prevented from drying for a curing period of at least 7 days after it is placed. The slab and footings shall be kept continuously moist for the entire period or until curing compound is applied. Moisture shall be maintained by sprinkling, flooding, covering with plastic sheeting, continuously moistened canvas, cloth mats, straw or other approved material. The walls shall be thoroughly wetted immediately after forms are removed and shall be kept wet until patching and repairs are made. After patching and repairs are made, curing compound may be applied in lieu of wetting. Curing compound shall meet the requirements of ASTM C 309, Type 2.
8. Concrete shall not be dropped more than 5 feet vertically unless suitable equipment is used to prevent segregation.
9. Reinforcing steel shall be ASTM designation A–615, grade 60.
10. Welded wire fabric, if used, shall meet the requirements of ASTM A–185.

DESIGN NOTES:

1. Foundation is to be field investigated to determine adequacy to support structure. Footing bearing pressure resulting from design loads is approximately 500 psf.
2. Frost heave potential should be considered on a site–by–site basis. Additional free–draining rock or other protection methods should be provided as needed.
3. The concrete structure is designed for an internal hydrostatic load of 60 lbs/cu ft. No backfill will be permitted on the outside of the wall.
4. The structure is designed according to the criteria in NRCS Practice Standard 313 for a medium service life (20 year minimum).

Unless otherwise marked, all splices shall be as follows:
Vertical reinforcement #4 – 22"
Horizontal reinforcement #4 – 28"

Designed B. Doerge, B. Wilson Date 2/93
Drawn kyasumiishi 2/93
Checked
Approved
Title

WASTE STACKING FACILITY
ABOVE GROUND
6' WALL HEIGHT – 6' MAXIMUM STORAGE DEPTH

NRCS
Natural Resources Conservation Service
United States Department of Agriculture

File Name
OR_AWS_ABOVE_6H6D.DWG
Drawing No.

Sheet 2 of 2

C:\home\CAD Drawings\(c)Animal_Waste\206\Dry_Stack\or_awm_above_6h6d.dwg, 3/5/2008 9:47:22 AM, Adobe PDF