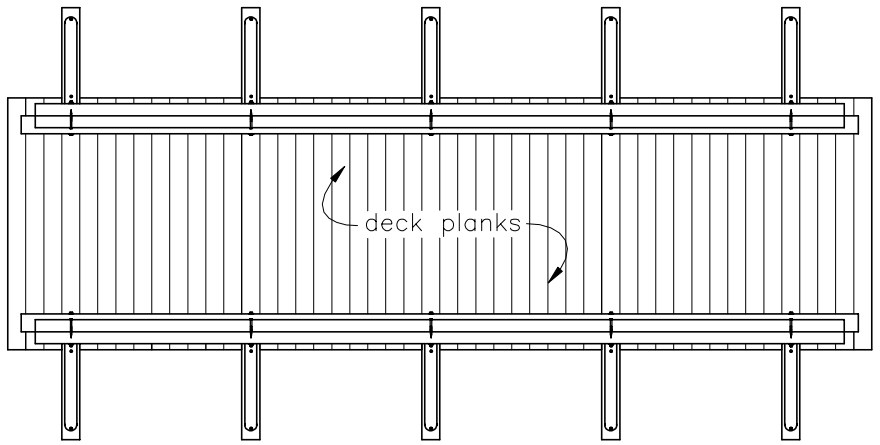

PLAN

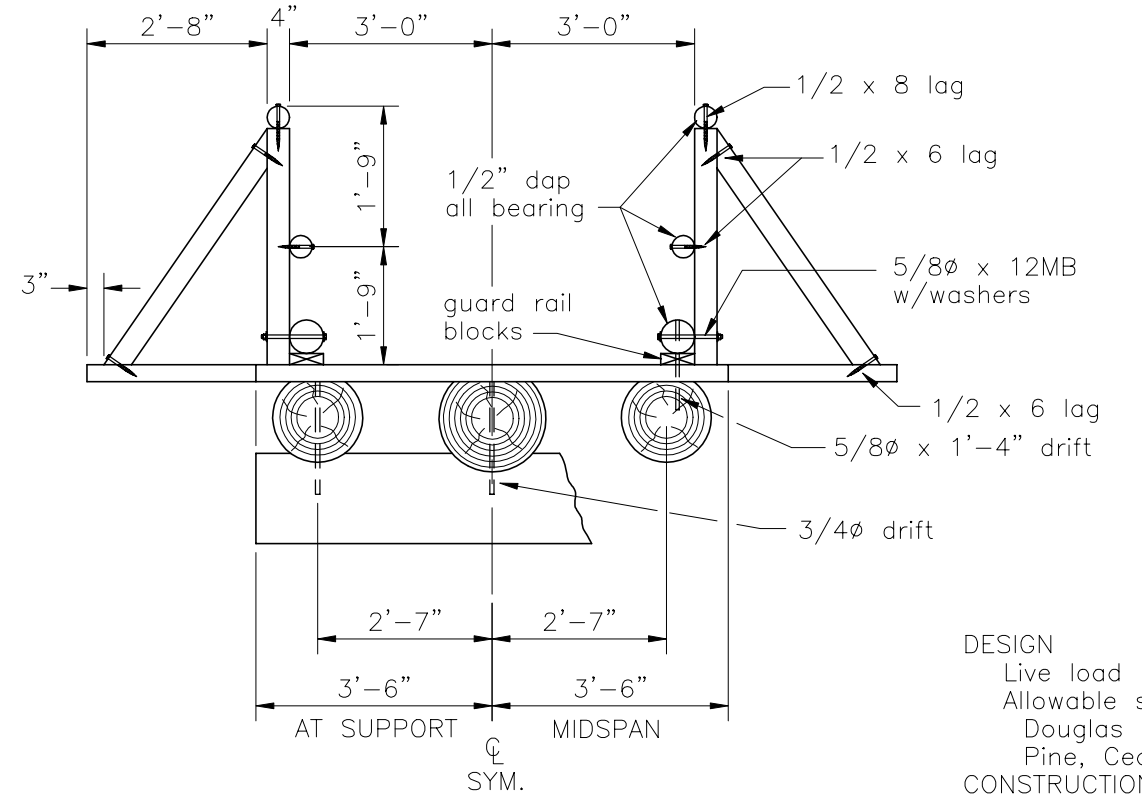

SECTION

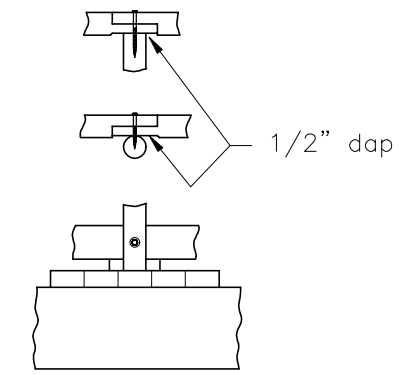

RAIL SPLICE

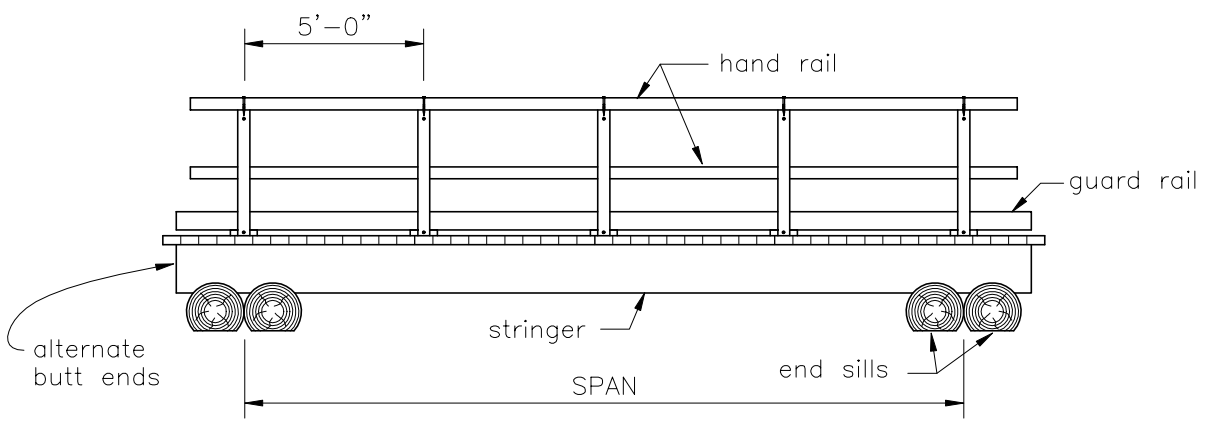

ELEVATION

The abutment foundation shall be investigated by a qualified engineer to determine adequacy of long-term bearing strength and protection from erosion. Streambank protection shall be provided if determined necessary.

NOTES

DESIGN
- Live load – snow – 100, 200 or 300 psf.
- Allowable stresses
  - Douglas Fir, Larch, Hemlock – 1500 psi.
  - Pine, Cedar, White Fir – 850 psi.

CONSTRUCTION
- Nail deck with 5 – 40d spikes per plank.
- Drill drift pin holes 1/16" undersize.
- Drill machine bolt holes 1/16" oversize.
- Drill lag screw holes 1/2" dia. for shank and 3/8" dia. for threads.
- Use cedar sills if available.
- For longer life use paste type penta-chlorophenol preservative on end grain, contact areas, and ground contact.
- Treat all holes with hot oil-base preservative.
- Countersink upper end of drift pins 1" minimum and fill hole with "pentagrease" or coal tar pitch.
- Keep upper edge of logs in same plane by varying depth of dap in sills.
- Minimum bearing width:
  - Deck to stringers – 8".
  - Stringers to sills – 12".

BILL OF MATERIALS

ITEM	MATERIAL	10 ft. SPAN			15 ft. SPAN			20 ft. SPAN			25 ft. SPAN			30 ft. SPAN			35 ft. SPAN			40 ft. SPAN			45 ft. SPAN			50 ft. SPAN		
		No.	Size	Length	No.	Size	Length	No.	Size	Length	No.	Size	Length	No.	Size	Length	No.	Size	Length	No.	Size	Length	No.	Size	Length	No.	Size	Length
LIVE LOAD – SNOW 100lb/ft²																												
STRINGERS	D Fir f=1500	3	10"	14'	3	10"	19'	3	12"	24'	3	14"	29'	3	16"	34'	3	18"	39'	3	20"	44'	3	21"	49'	3	23"	54'
Peeled Dia.	Pine f=850	3	10"	14'	3	12"	19'	3	15"	24'	3	17"	29'	3	19"	34'	3	21"	39'	3	24"	44'						
LIVE LOAD – SNOW 200lb/ft²																												
STRINGERS	D Fir f=1500	3	10"	14'	3	12"	19'	3	14"	24'	3	17"	29'	3	19"	34'	3	21"	39'	3	23"	44'						
Peeled Dia.	Pine f=850	3	12"	14'	3	14"	19'	3	17"	24'	3	20"	29'	3	23"	34'												
LIVE LOAD – SNOW 300lb/ft²																												
STRINGERS	D Fir f=1500	3	10"	14'	3	13"	19'	3	16"	24'	3	18"	29'	3	21"	34'	3	23"	39'									
Peeled Dia.	Pine f=850	3	12"	14'	3	16"	19'	3	19"	24'	3	23"	29'															
Guard Rail Blocks	Fir or Pine	6	2x6	9"	8	2x6	9"	10	2x6	9"	12	2x6	9"	14	2x6	9"	16	2x6	9"	18	2x6	9"	20	2x6	9"	22	2x6	9"
Guard Rail	Fir or Pine		6"ø	28'		6"ø	38'		6"ø	48'		6"ø	58'		6"ø	68'		6"ø	78'		6"ø	88'		6"ø	98'		6"ø	108'
Hand Rail & Posts	Fir or Pine		4"ø	92'		4"ø	126'		4"ø	162'		4"ø	195'		4"ø	230'		4"ø	264'		4"ø	300'		4"ø	333'		4"ø	368'
Deck Plank			3x6	228'		3x6	308'		3x6	386'		3x6	464'		3x6	542'		3x6	620'		3x6	698'		3x6	778'		3x6	856'
Drift Pins		6	5/8 ø	16"	8	5/8 ø	16"	10	5/8 ø	16"	12	5/8 ø	16"	14	5/8 ø	16"	16	5/8 ø	16"	18	5/8 ø	16"	20	5/8 ø	16"	22	5/8 ø	16"
Drift Pins		12	3/4 ø	14"	12	3/4 ø	16"	12	3/4 ø	20"	12	3/4 ø	22"	12	3/4 ø	26'	12	3/4 ø	28"	12	3/4 ø	30"	12	3/4 ø	30"	12	3/4 ø	30"
Machine Bolts w/2 washers		6	5/8 ø	12"	8	5/8 ø	12"	10	5/8 ø	12"	12	5/8 ø	12"	14	5/8 ø	12"	16	5/8 ø	12"	18	5/8 ø	12"	20	5/8 ø	12"	22	5/8 ø	12"
Lag Screws		6	1/2 ø	8"	8	1/2 ø	8"	10	1/2 ø	8"	12	1/2 ø	8"	14	1/2 ø	8"	16	1/2 ø	8"	18	1/2 ø	8"	20	1/2 ø	8"	22	1/2 ø	8"
Lag Screws		18	1/2 ø	6"	24	1/2 ø	6"	30	1/2 ø	6"	36	1/2 ø	6"	42	1/2 ø	6"	48	1/2 ø	6"	42	1/2 ø	6"	60	1/2 ø	6"	66	1/2 ø	6"
Galv. Nails	40d	10#			15#			15#			20#			20#			25#			30#			30#			35#		

Practice Code _____ Job Class _____

		DATE
Designed	Region Six–USDA, FS	10/69
Drawn	(CAD) k. yasumiishi	5/94
Checked	W.R. Verboort	2/82
Approved	Roy Bright	
Title	State Conservation Engineer	

STANDARD LOG STRINGER TRAIL BRIDGE

USDA NRCS Natural Resources Conservation Service

File Name LSK575020.dwg

Oregon Standard Number LSK–575020

Sheet No. 1 of 1