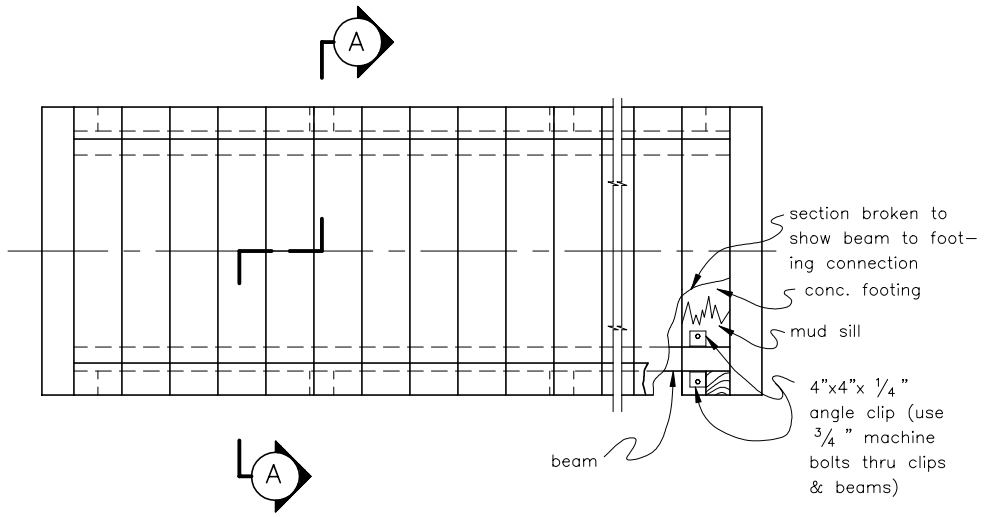

PLAN

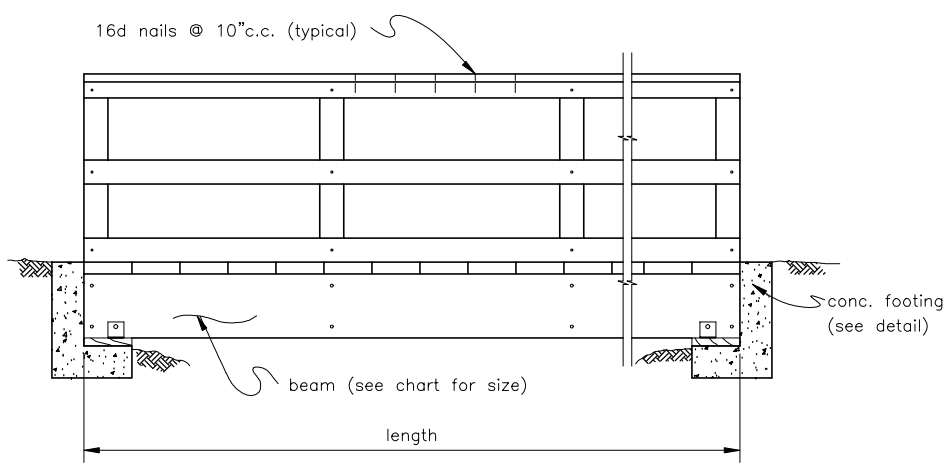

SECTIONAL ELEVATION

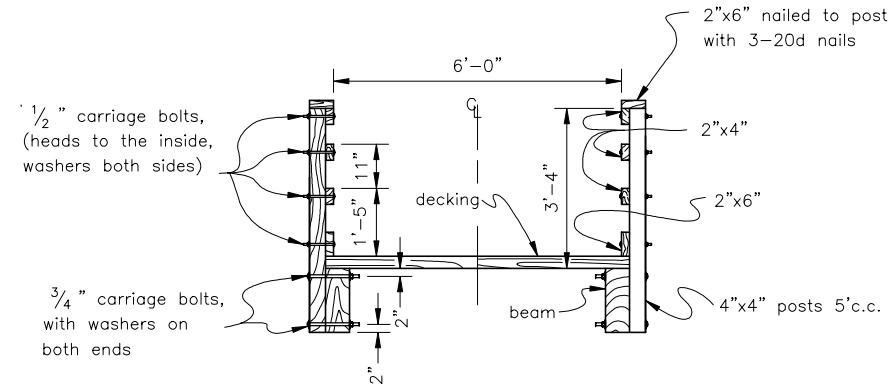

SECTION (A)
PEDESTRIAN OPTION

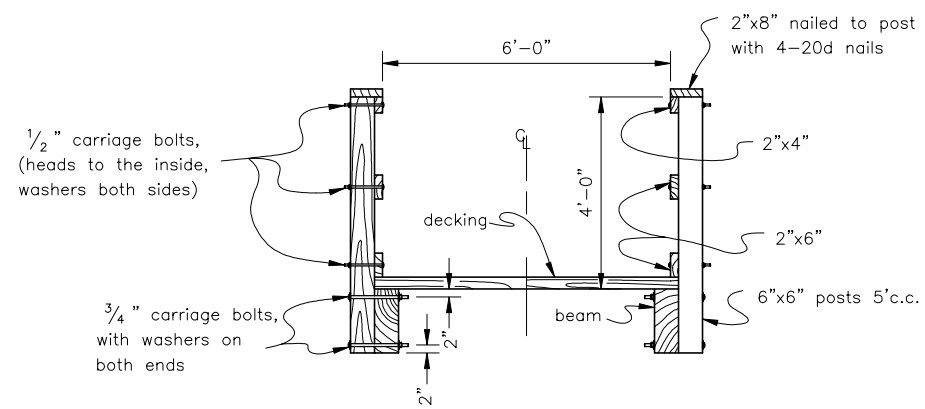

SECTION (A)
LIVESTOCK OPTION

1 0 4
SCALE IN FEET

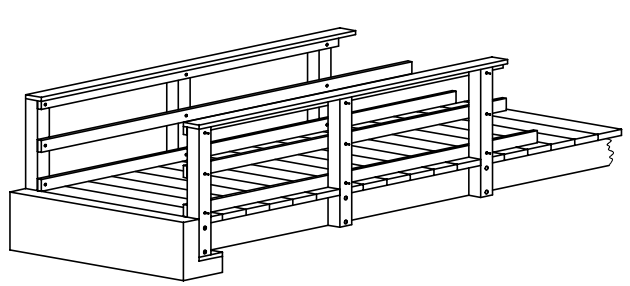

PERSPECTIVE
VIEW OF BRIDGE

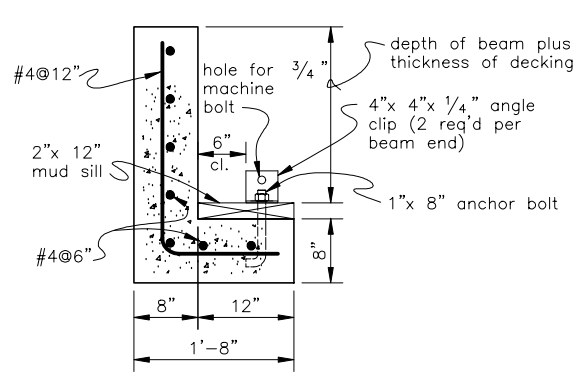

CONCRETE FOOTING
DETAIL
(NOT TO SCALE)

BEAMS	
nominal size	max. length
4 X 16	18'
6 X 16	22½'
8 X 16	26'
8 X 20	32'
8 X 22	35'
8 X 24	38'
12 X 22	42'
12 X 24	45'

DECKING
*[1] 3" X 12" (use 2-40d nails each end) or 4" X 8" (use 2-60d nails each end) decking spaced 1/2" apart

*[1] 3" X 6", 3" X 8" or 3" X 10" may be instead of 3" X 12" for pedestrain option only.

MATERIALS CHART

LUMBER SPECIFICATIONS

1. Structural lumber shall conform to the Western Wood Products Assoc. grading rules. Treated lumber shall be impregnated with Pentachlorophenol at a minimum retention rate of 0.5 lbs per cubic foot or chromated copper arsenate with a minimum retention rate of 0.4 lbs per cubic foot (AWPA-C2).
2. All framing shall be true and exact. Lumber shall be accurately cut and assembled to a close fit and shall have even bearing over the entire contact surfaces. No open or shimmed joints will be accepted. Nails and spikes shall be driven with just sufficient force to set the heads flush with the surface of the wood.
3. Surfacing, cutting, and boring of lumber shall be done before treatment. If cutting and boring of treated lumber is necessary, all cuts and borings shall be carefully trimmed and coated with not less than three brush coats of the same preservative used in the original treatment.

HARDWARE SPECIFICATIONS

1. Steel bolts shall conform to the requirements of ASTM Specification A-307, grade A. Galvanized or zinc-coated bolts shall be used.
2. Washers shall be used in contact with all bolt heads and nuts that would otherwise be in contact with wood. Cast iron washers shall be used when the bolt will be in contact with earth. Zinc-plated steel standard flat washers shall be used in all other locations.
3. Structural shapes, rods and plates shall be structural steel conforming to the require-ments of ASTM Specification A-36 and shall be galvanized. All nails shall be galvanized.

CONCRETE SPECIFICATIONS

1. The concrete shall have a minimum compressive strength at 28 days of 3000 psi. Minimum cement content shall be 6 bags/cy and maximum net water content shall be 5.2 gal/bag. The slump shall be 2 to 4 inches and the air content shall be 5 to 8% of the volume of concrete.
2. Forms shall be mortar tight, substantial and unyielding and shall be constructed so that the finished concrete will conform to the specified dimensions.
3. The concrete shall be deposited as closely as possible to its final position in the forms and shall be worked into the corners and angles of the forms and around all reinforce-ment. Immediately after placement, the concrete shall be consolidated by vibrating.
4. Forms shall not be removed before 24 hours have elapsed after placement of concrete.
5. Concrete shall be prevented from drying for a curing period of at least 7 days after it is placed. The footing shall be kept continuously moist for the entire period or until curing compound is applied. Moisture shall be maintained by sprinkling, flooding, covering with plastic sheeting, continuously moistened canvas, cloth mats, straw, or other approved material. A curing compound may be applied in lieu of wetting. Curing compound shall meet the requirements of ASTM C-309, Type2.

OPERATION AND MAINTENANCE

1. The bridge should be checked periodically for loose or broken lumber or hardware. Defective materials should be replaced. Bolts should be checked for tightness six months and one year after assembly, and retightened as necessary to allow for shrinkage of the lumber.
2. If 3" decking is used and wear begins to occur from shod stock, a 1" replaceable wood wear surface should be applied to that portion of the bridge deck between the railings.
3. If Pentachlorophenol-treated wood is used for the deck, concrete sand should be spread on the decking material to provide traction for livestock. This should be maintained, particularly in wet weather, until the excess oil bleeds out of the wood surface.
4. If the bridge is gated, it should be gated on both ends so that livestock can be prevented from queuing up on the bridge. This should be done to minimize the deposition of animal waste on the bridge deck and subsequent stream pollution.

DESIGN AND CONSTRUCTION NOTES

1. Reinforcing steel shall be ASTM Designation A-615, grade 40.
2. The abutment foundation shall be investigated by a qualified engineer to determine adequacy of long-term bearing strength and protection from erosion. Streambank protection shall be provided if determined necessary.
3. The bridge is designed for a normal (long-term duration) load of 100 psf.
4. F_b values as listed in Western Woods Use Book, copyright 1973, Tables 4.2, 4.4, 4.5, and 4.6, as appropriate, for No.1 Douglas Fir-Larch.
5. Joints in the railing shall be staggered and located at the posts.
6. The bridge should be located high enough above the design water surface to allow the passage of floating debris.

Practice Code _____ Job Class _____

		DATE
Designed	W.R. Verboort	1/82
Drawn	(CAD) L. Kamna	4/94
Checked	J.W.S.	1/82
Approved	Roy Bright	
Title	State Conservation Engineer	

STANDARD LIVESTOCK/PEDESTRIAN BRIDGE

USDA NRCS Natural Resources Conservation Service

File Name LSK575010.dwg

Oregon Standard Number LSK-575010

Sheet No. 1 of 1