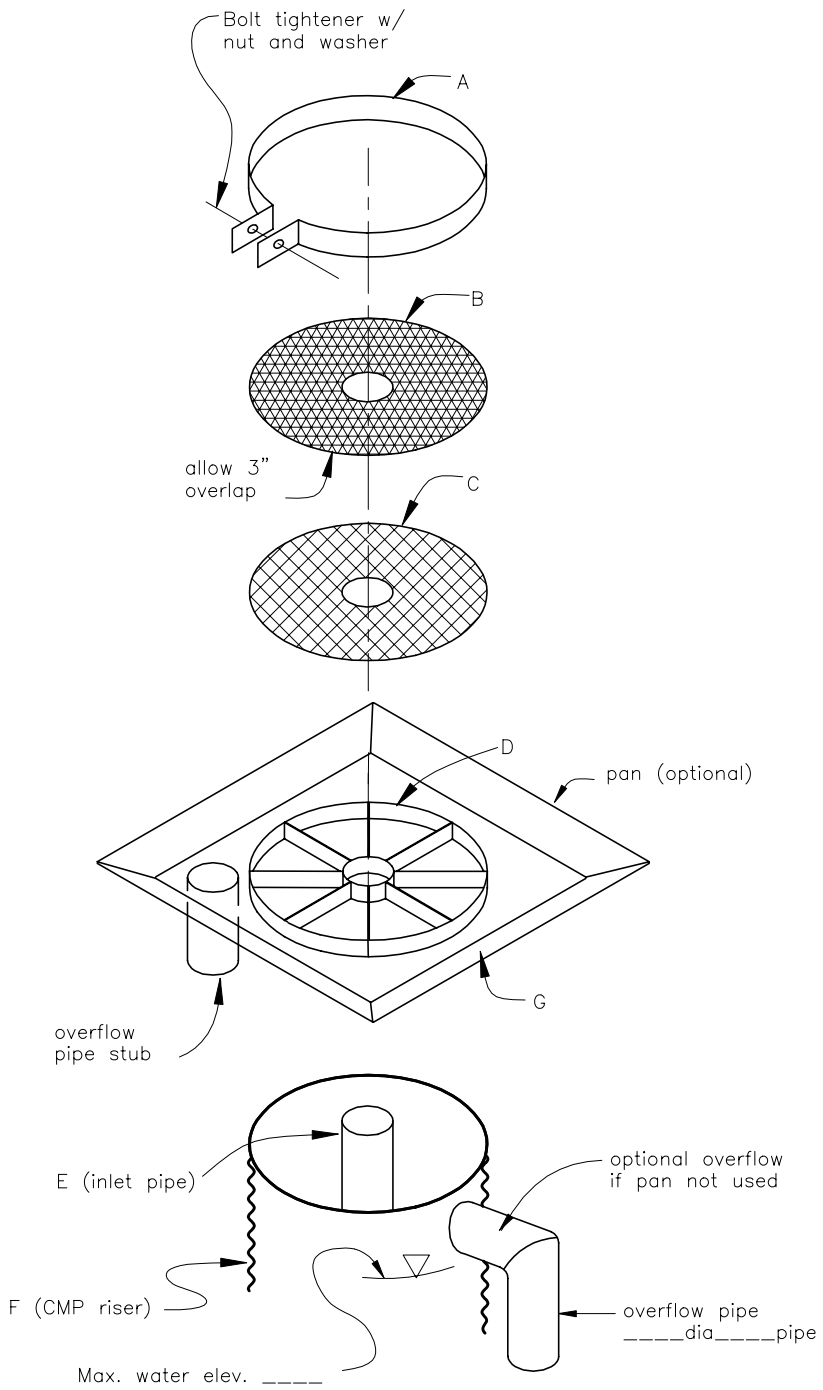

DRAWING NOT TO SCALE

A. 1 x 1/8 inch strap iron lock hoop. These hold screens (B and C) in place on frame (D).

B. 20 mesh stainless steel wire cloth screen. Screen is bent over edge of spoked frame and held in place by lock hoop (A).

C. 3/4 inch size, 13 gage expanded metal with flattened mesh. Weld to spoked frame.

D. 2 x 3/16 inch outer ring with 1 1/2 x 1/8 inch strap iron, spoked frame, having a ___inch hub hoop and a ___ inch outer hoop. Spokes rest on lip of riser.

E. ___inch inlet pipe extends 2 to 4 inches above the screen.

F. ___inch galv. CMP riser. The frame (D) lies on top of the riser. Use 14 gage minimum.

G. 12 ga. steel plate to be welded to the bottom of spoked frame (D). Weld ____ø, 6" stub overflow pipe to 12 ga. steel plate.

FLOW cfs	RISER DIA	SCREEN DIA
1	8"	48"
2	10"	60"
3	12"	72"
4	15"	84"
5	18"	96"

Recommended riser velocity 3 fps (min)

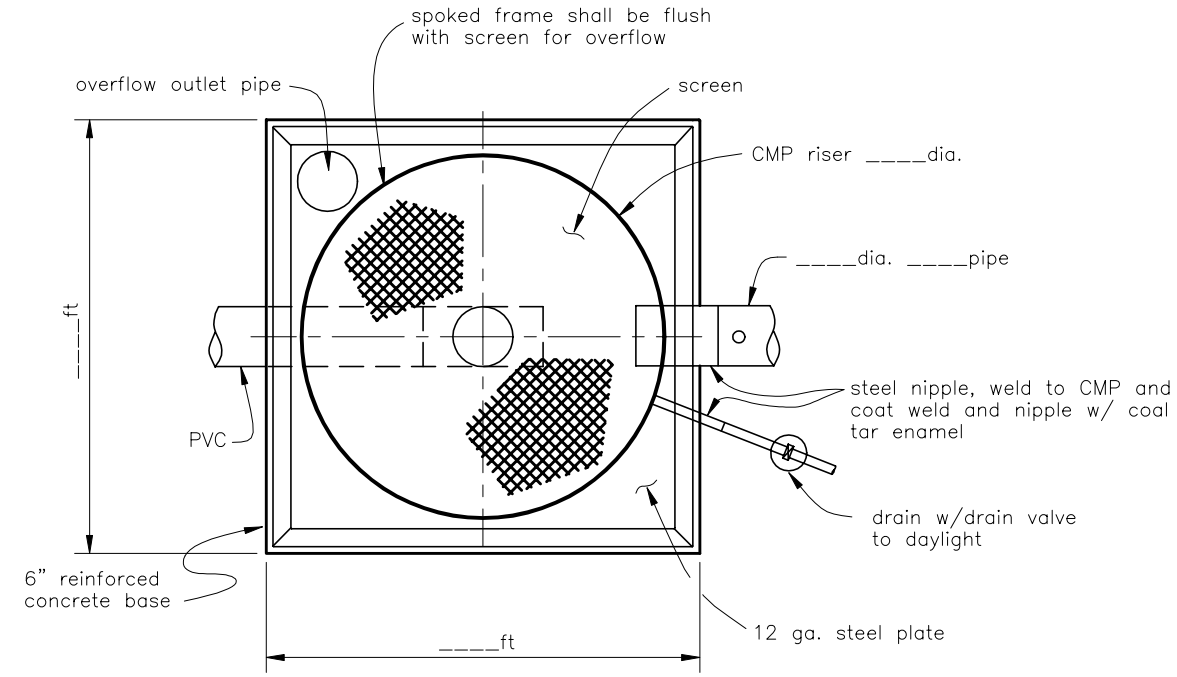

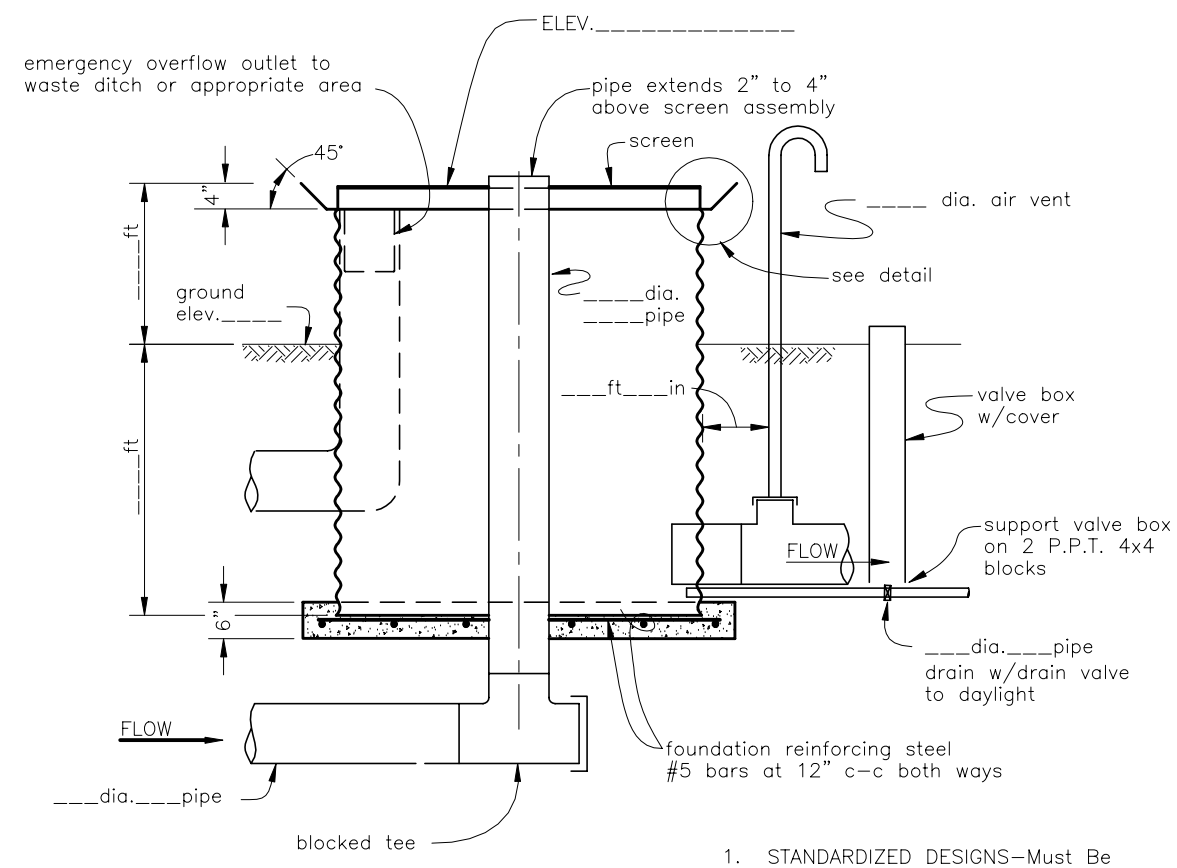

1. STANDARDIZED DESIGNS—Must Be Adapted to the Specific Site.

2. Inlet and outlet pipes may be installed through CMP riser or through concrete base as desired.

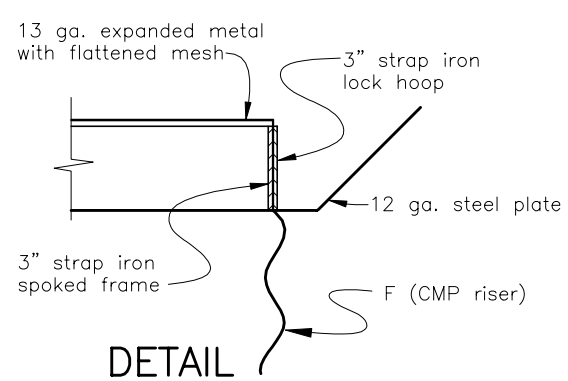

DETAIL

Practice Code ____ Job Class ____

DATE 7-93

Designed ____
Drawn k. yosumiishi
Checked ____
Approved ____
Title ____

TURBULENT FOUNTAIN IRRIGATION SCREEN

USDA NRCS Natural Resources Conservation Service

File Name IRR587040.dwg

Oregon Standard Number IRR-587040

Sheet No. 1 of 1