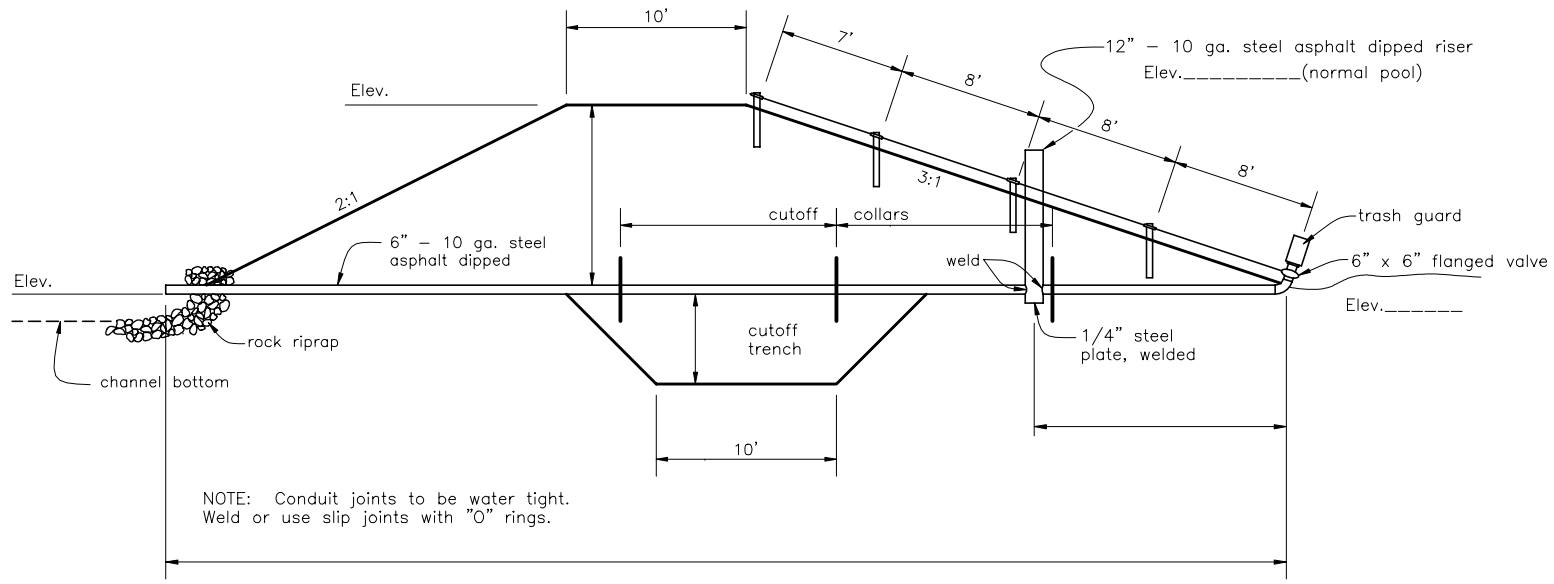

CROSS SECTION OF DAM

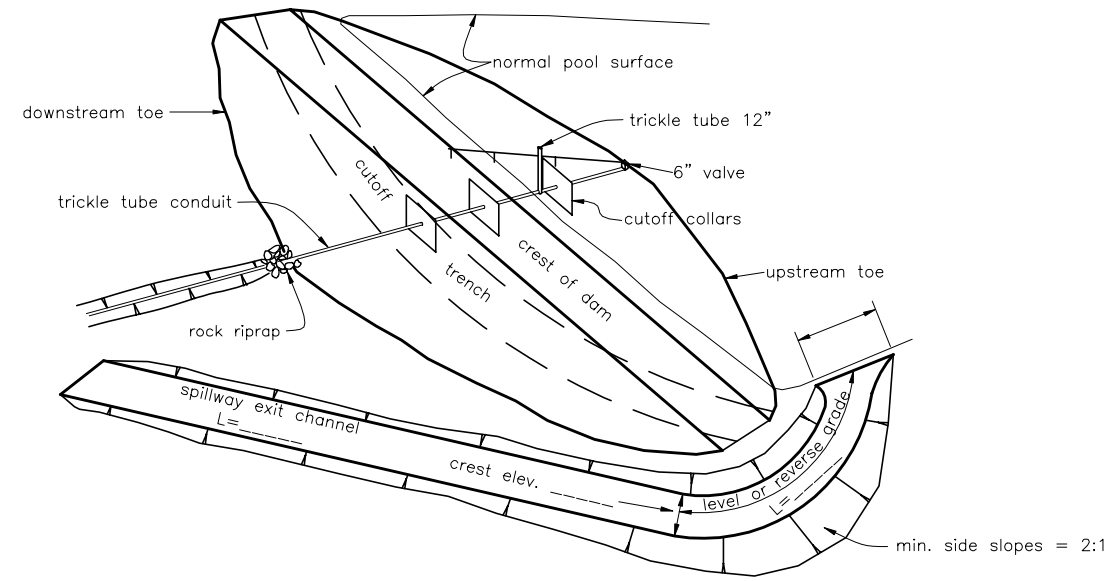

ISOMETRIC VIEW – DAM AND SPILLWAY

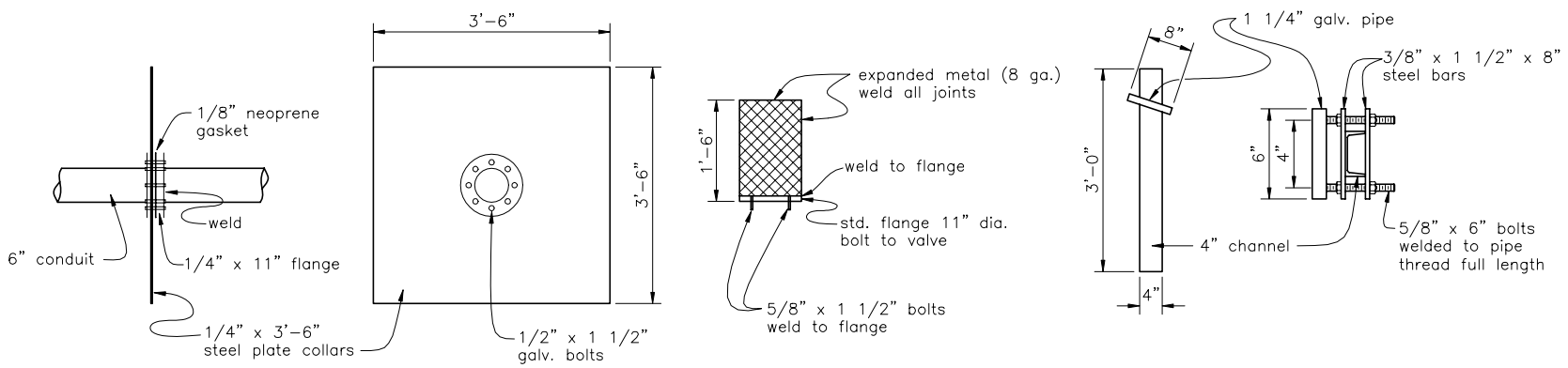

CUTOFF COLLARS TRASH GUARD VALVE STEM SUPPORT

CONDUIT AND CONTROL DETAILS

1. Clear and grub trees, brush and debris from dam and reservoir site.
2. Strip and waste topsoil, roots and small debris from damsite and borrow areas. Waste outside reservoir area.
3. Excavate cutoff trench to depth as directed by the engineer.
4. De–water and backfill the cutoff trench. All fill material shall be placed in horizontal layers not to exceed the following thicknesses before compaction.
   - Sheepsfoot – – – – – – – – – – – – – – – 8 inches
   - Rubber tired hauling equipment – – – – 6 inches
   - Bulldozer with rubber tired tractor for compaction. – – – – – – – – 4 inches
5. Install trickle tube assembly as shown on plan.
6. All fill material shall be placed and compacted by hand around the trickle tube assembly, outlet pipe and cutoff collars.
7. The satisfactory moisture content of all fill material shall be established by the engineer prior to construction.
8. The dam and spillway shall be constructed in a workman like manner and to the lines and grades as staked and/or shown on the plans.
9. The valve control supports shall be driven in place and the stem pipe installed properly.
10. The completed dam and spillway shall be seeded to suitable grasses as recommended.

HYDROLOGIC:
- Watershed area_____Ac.
- Estimated run–off_____c.f.s.
- Design frequency_____yrs.

RESERVOIR:
- Capacity_____Ac. ft.
- Surface area_____Ac.
- Mean depth_____ft.

SPILLWAY:
- b =____n = ____A = ____
- dn=____Se= ____Q = ____
- SS=____V = ____L = ____
- Freeboard_____ft.
- Excavation_____cu. yds.

EMBANKMENT:
- Height_____ft.
- Top width_____ft.
- Length_____ft.
- Fill_____cu. yds.

CUTOFF TRENCH:
- Depth_____ft.
- Bottom width_____ft.
- Length_____ft.
- Side slopes_____ratio
- Excavation_____cu. yds.

CONDUIT ASSEMBLY:
- Riser size_____in.
- Conduit size_____in.
- Valve size_____in.
- Cutoff collars_____No.
- Stem pipe_____ft.

MISC. VOLUMES:
- Stripping_____cu. yds.
- Rock riprap_____cu. yds.
- Clear and grub_____Ac.

1. A permit to construct a reservoir and store water is required by Oregon Law.
2. This plan is limited to dams under 10 feet high that store less than 9.2 acre–feet.

LOCATION MAP

SCALE: 1"=

GENERAL LAYOUT

SCALE: 1"=
CONTOUR INTERVAL:

Practice Code_____ Job Class_____

		DATE
Designed		
Drawn	k. yosumiishi	3/93
Checked		
Approved		
Title		

SMALL DAMS, UNDER 10 FEET

USDA NRCS Natural Resources Conservation Service

File Name
DAS349010.dwg

Oregon Standard Number
DAS–349010

Sheet No. 1 of 1