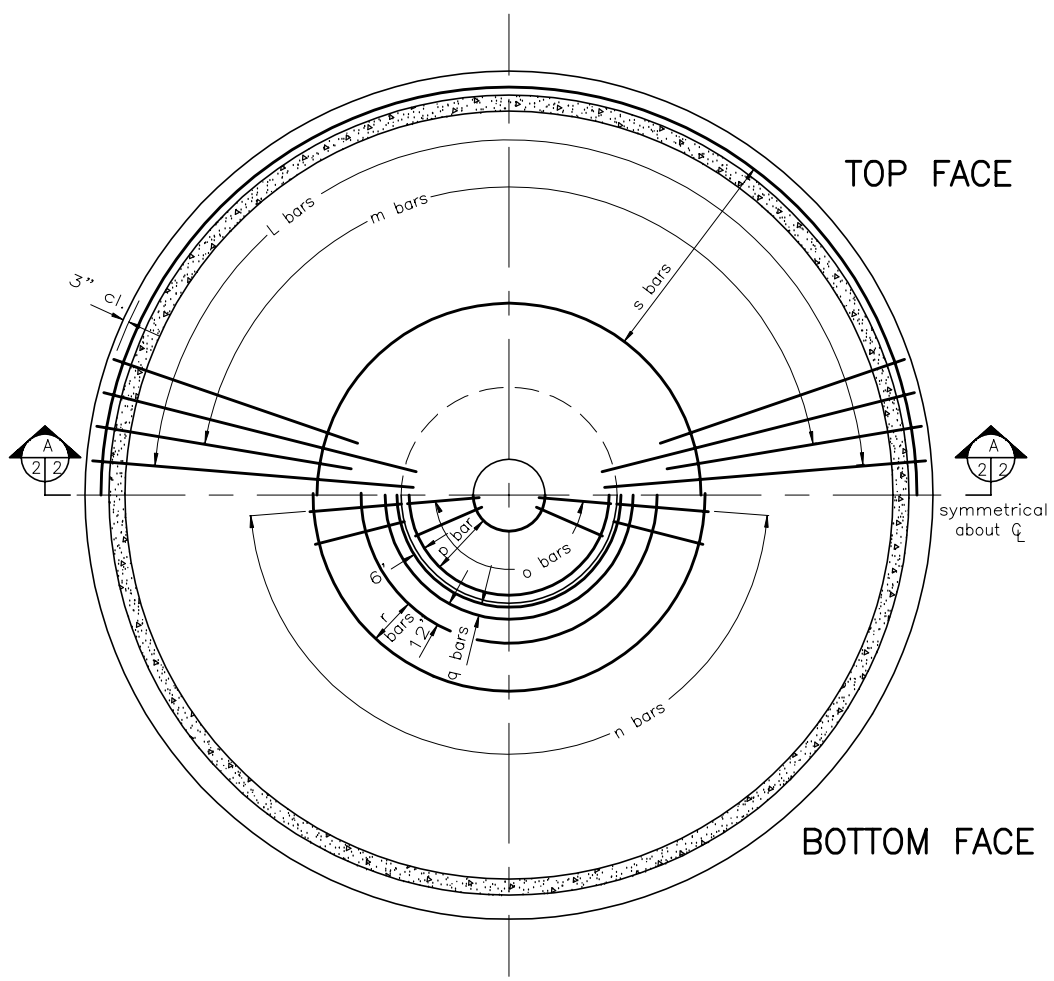


PLAN OF FLOOR SLAB

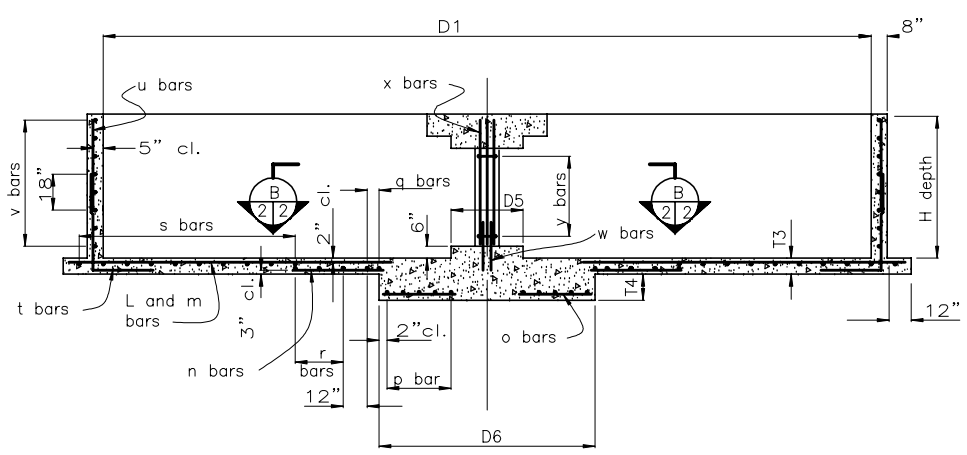


SECTION A 2 2

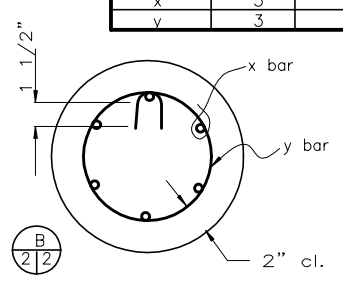


SECTION B 2 2

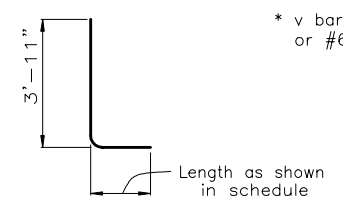


t bars

* v bars may be either #4 bars @ 9" c.c. or #6 bars @ 1'-6" c.c.

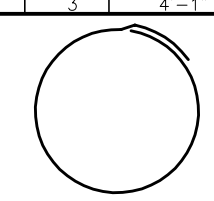

Length includes 18" splice. Add 18" for each additional splice for p, q, r and s bars.

## REINFORCING SCHEDULE

### 32' DIAMETER 6' DEPTH

| REINF BARS | SIZE | LENGTH | SPACING | WHERE SPACING MEASURED | QUAN EACH | TOTAL LENGTH |
|---|---|---|---|---|---|---|
| L | 6 | 13'-5" | 2'-7 3/4" | 16'-0" from center | 38 | 509'-10" |
| m | 6 | 10'-9" | 2'-7 3/4" | 16'-0" from center | 38 | 408'-6" |
| n | 4 | 3'-10" | 1'-3 7/8" | 8'-0" from center | 38 | 145'-8" |
| o | 4 | 3'-0" | 1'-4 1/2" | 4'-2" from center | 19 | 57'-0" |
| p | 5 | 10'-11" to 27'-8" | 0'-8" | 1'-6" to 4'-2" from center | 5 | 96'-6" |
| q | 5 | 29'-9" to 32'-11" | 0'-6" | 4'-6" to 5'-0" from center | 2 | 62'-8" |
| r | 5 | 39'-2" to 51'-9" | 1'-0" | 6'-0" to 8'-0" from center | 3 | 136'-5" |
| s | 4 | 51'-9" to 108'-4" | 1'-0" | 8'-0" to 17'-0" from center | 10 | 800'-5" |
| t | 4 | 2'-6" | 1'-3 7/8" | 16'-0" from center | 76 | 418'-0" |
| u | 4 | 3'-9" | | | 76 | 285'-0" |
| * v | 4/6 | 104'-7" | 0'-9"/ 1'-6" | 0'-9" above floor | 5/8 | 418'-4" |
| w | 5 | 2'-0" | | | 6 | 12'-0" |
| x | 5 | 5'-2" | | | 6 | 31'-0" |
| y | 3 | 2'-7" | 0'-10" | 0'-5" above floor | 5 | 12'-11" |

## REINFORCING SCHEDULE

### 48' DIAMETER 6' DEPTH

| REINF BARS | SIZE | LENGTH | SPACING | WHERE SPACING MEASURED | QUAN EACH | TOTAL LENGTH |
|---|---|---|---|---|---|---|
| L | 6 | 19'-2" | 1'-2 7/8" | 15'-0" from center | 76 | 1456'-8" |
| m | 6 | 15'-9" | 1'-2 7/8" | 15'-0" from center | 76 | 1197'-0" |
| n | 4 | 4'-11" | 1'-3 7/8" | 8'-0" from center | 38 | 186'-10" |
| o | 4 | 4'-6" | 1'-4 7/8" | 4'-3" from center | 19 | 85'-6" |
| p | 5 | 15'-8" to 40'-9" | 0'-6" | 2'-3" to 6'-3" from center | 9 | 253'-11" |
| q | 6 | 43'-11" to 58'-0" | 0'-9" | 6'-9" to 9'-0" from center | 4 | 203'-10" |
| r | 5 | 64'-4" to 70'-7" | 1'-0" | 10'-0" to 11'-0" from center | 2 | 134'-11" |
| s | 5 | 70'-0" to 158'-7" | 1'-0" | 11'-0" to 25'-0" from center | 15 | 1718'-9" |
| t | 4 | 3'-0" | 1'-0 1/8" | 24'-5" from center | 152 | 912'-0" |
| u | 3 | 3'-9" | | | 152 | 570'-0" |
| * v | 4/6 | 154'-10" | 0'-9"/ 1'-6" | 0'-9" above floor | 4 | 619'-4" |
| w | 6 | 2'-0" | | | 6 | 12'-0" |
| x | 6 | 4'-6" | | | 6 | 27'-0" |
| y | 3 | 4'-1" | 1'-0" | 0'-3" above floor | 4 | 16'-4" |

## REINFORCING SCHEDULE

### 32' DIAMETER 8' DEPTH

| REINF BARS | SIZE | LENGTH | SPACING | WHERE SPACING MEASURED | QUAN EACH | TOTAL LENGTH |
|---|---|---|---|---|---|---|
| L | 6 | 13'-5" | 2'-7 3/4" | 16'-0" from center | 38 | 509'-10" |
| m | 6 | 11'-1" | 2'-7 3/4" | 16'-0" from center | 38 | 421'-2" |
| n | 4 | 3'-10" | 1'-3 7/8" | 8'-0" from center | 38 | 145'-8" |
| o | 4 | 3'-0" | 1'-4 1/2" | 4'-2" from center | 19 | 57'-0" |
| p | 5 | 10'-11" to 26'-8" | 0'-8" | 1'-6" to 4'-2" from center | 5 | 96'-6" |
| q | 5 | 29'-9" to 32'-11" | 0'-6" | 4'-6" to 5'-0" from center | 2 | 62'-8" |
| r | 5 | 39'-2" to 51'-9" | 1'-0" | 6'-0" to 8'-0" from center | 3 | 136'-5" |
| s | 5 | 51'-9" to 108'-4" | 1'-0" | 8'-0" to 17'-0" from center | 10 | 800'-5" |
| t | 5 | 2'-10" | 1'-3 7/8" | 16'-0" from center | 76 | 443'-4" |
| u | 4 | 5'-9" | | | 76 | 437'-0" |
| * v | 4/6 | 104'-7" | 0'-9"/1'-6" | 0'-3" above floor | 6/11 | 627'-6" |
| w | 5 | 2'-0" | | | 6 | 12'-0" |
| x | 5 | 7'-2" | | | 6 | 43'-0" |
| y | 3 | 2'-7" | 0'-10" | 0'-2" above floor | 8 | 20'-8" |

## REINFORCING SCHEDULE

### 48' DIAMETER 8' DEPTH

| REINF BARS | SIZE | LENGTH | SPACING | WHERE SPACING MEASURED | QUAN EACH | TOTAL LENGTH |
|---|---|---|---|---|---|---|
| L | 6 | 19'-2" | 1'-2 7/8" | 15'-0" from center | 76 | 1456'-8" |
| m | 6 | 16'-8" | 1'-2 7/8" | 15'-0" from center | 76 | 1266'-8" |
| n | 4 | 4'-11" | 1'-3 7/8" | 8'-0" from center | 38 | 186'-10" |
| o | 4 | 4'-6" | 1'-4 7/8" | 4'-3" from center | 19 | 85'-6" |
| p | 5 | 15'-8" to 40'-9" | 0'-6" | 2'-3" to 6'-3" from center | 9 | 253'-11" |
| q | 6 | 43'-11" to 58'-0" | 0'-9" | 6'-9" to 9'-0" from center | 4 | 203'-10" |
| r | 5 | 64'-4" to 70'-7" | 1'-0" | 10'-0" to 11'-0" from center | 2 | 134'-11" |
| s | 5 | 70'-7" to 158'-7" | 1'-0" | 11'-0" to 25'-0" from center | 15 | 1718'-9" |
| t | 5 | 3'-4" | 1'-0 1/8" | 24'-5" from center | 152 | 962'-8" |
| u | 4 | 5'-9" | | | 152 | 874'-0" |
| * v | 4/6 | 154'-10" | 0'-9"/1'-6" | 0'-3" above floor | 6 | 929'-0" |
| w | 6 | 2'-0" | | | 6 | 12'-0" |
| x | 6 | 6'-6" | | | 6 | 39'-0" |
| y | 3 | 4'-1" | 1'-0" | 0'-3" above floor | 6 | 24'-6" |

## REINFORCING SCHEDULE

### 32' DIAMETER 10' DEPTH

| REINF BARS | SIZE | LENGTH | SPACING | WHERE SPACING MEASURED | QUAN EACH | TOTAL LENGTH |
|---|---|---|---|---|---|---|
| L | 6 | 13'-5" | 2'-0 1/8" | 16'-0" from center | 50 | 670'-10" |
| m | 6 | 11'-1" | 2'-0 1/8" | 16'-0" from center | 50 | 554'-2" |
| n | 4 | 3'-10" | 2'-0 1/8" | 8'-0" from center | 25 | 95'-10" |
| o | 4 | 3'-0" | 1'-0" | 4'-0" from center | 25 | 75'-0" |
| p | 6 | 10'-11" to 26'-8" | 0'-10" | 1'-6" to 4'-0" from center | 4 | 75'-2" |
| q | 5 | 29'-9" to 39'-2" | 0'-6" | 4'-6" to 6'-0" from center | 4 | 137'-10" |
| r | 5 | 45'-6" to 51'-9" | 1'-0" | 7'-0" to 8'-0" from center | 2 | 97'-3" |
| s | 5 | 51'-9" to 108'-4" | 1'-0" | 8'-0" to 17'-0" from center | 10 | 800'-5" |
| t | 5 | 3'-2" | 1'-0 1/16" | 16'-0" from center | 100 | 616'-8" |
| u | 4 | 7'-9" | | | 100 | 775'-0" |
| * v | 4/6 | 104'-7" | 0'-9'/ 1'-6" | 0'-6" above floor | 7/14 | 732'-1" |
| w | 5 | 2'-0" | | | 6 | 12'-0" |
| x | 5 | 9'-2" | | | 6 | 55'-0" |
| y | 3 | 2'-7" | 0'-10" | 0'-4" above floor | 10 | 25'-10" |

## REINFORCING SCHEDULE

### 48' DIAMETER 10' DEPTH

| REINF BARS | SIZE | LENGTH | SPACING | WHERE SPACING MEASURED | QUAN EACH | TOTAL LENGTH |
|---|---|---|---|---|---|---|
| L | 7 | 19'-2" | 1'-2 7/8" | 15'-0" from center | 76 | 1456'-8" |
| m | 7 | 16'-2" | 1'-2 7/8" | 15'-0" from center | 76 | 1228'-8" |
| n | 4 | 4'-11" | 1'-3 7/8" | 15'-0" from center | 38 | 186'-10" |
| o | 4 | 4'-6" | 1'-4 7/8" | 4'-3" from center | 19 | 85'-6" |
| p | 6 | 15'-8" to 40'-9" | 0'-8" | 2'-3" to 6'-3" from center | 7 | 197'-6" |
| q | 6 | 43'-11" to 51'-9" | 0'-7 1/2" | 6'-9" to 8'-0" from center | 3 | 143'-6" |
| r | 6 | 58'-0" to 70'-7" | 1'-0" | 9'-0" to 11'-0" from center | 3 | 192'-11" |
| s | 6 | 70'-7" to 158'-7" | 1'-0" | 11'-0" to 25'-0" from center | 15 | 1718'-9" |
| t | 6 | 3'-7" | 1'-0 1/8" | 24'-5" from center | 152 | 1000'-8" |
| u | 5 | 7'-9" | | | 152 | 1178'-0" |
| * v | 4/6 | 154'-10" | 0'-9"/ 1'-6" | 0'-6" above floor | 7 | 1083'-10" |
| w | 6 | 2'-0" | | | 6 | 12'-0" |
| x | 6 | 8'-6" | | | 6 | 51'-0" |
| y | 3 | 4'-1" | 1'-0" | 0'-3" above floor | 8 | 32'-8" |

## DIMENSION SCHEDULE

| DIMENSION | | DIAMETER 32' | DIAMETER 48' |
|---|---|---|---|
| D1 | | 32'-0" | 48'-0" |
| D5 | | 3'-0" | 4'-6" |
| D6 | | 9'-0" | 13'-6" |
| T3 | | 0'-8" | 0'-10" |
| T4 | H = 6' | 0'-9" | 1'-2" |
| | H = 8' | 0'-11" | 1'-5" |
| | H = 10' | 1'-1" | 1'-7" |

| | | DATE |
|---|---|---|
| Designed | R. L. H. | 9/90 |
| Drawn | K Yasumiishi | 10/90 |
| Checked | | |
| Approved | | |
| Title | State Conservation Engineer | |

# COVERED LIQUID MANURE TANK
## 32' AND 48' DIAMETER

USDA NRCS Natural Resources Conservation Service

File Name AWM313410-2of2.dwg

Oregon Standard Number AWM-313410

SHEET NO. 2 OF 2