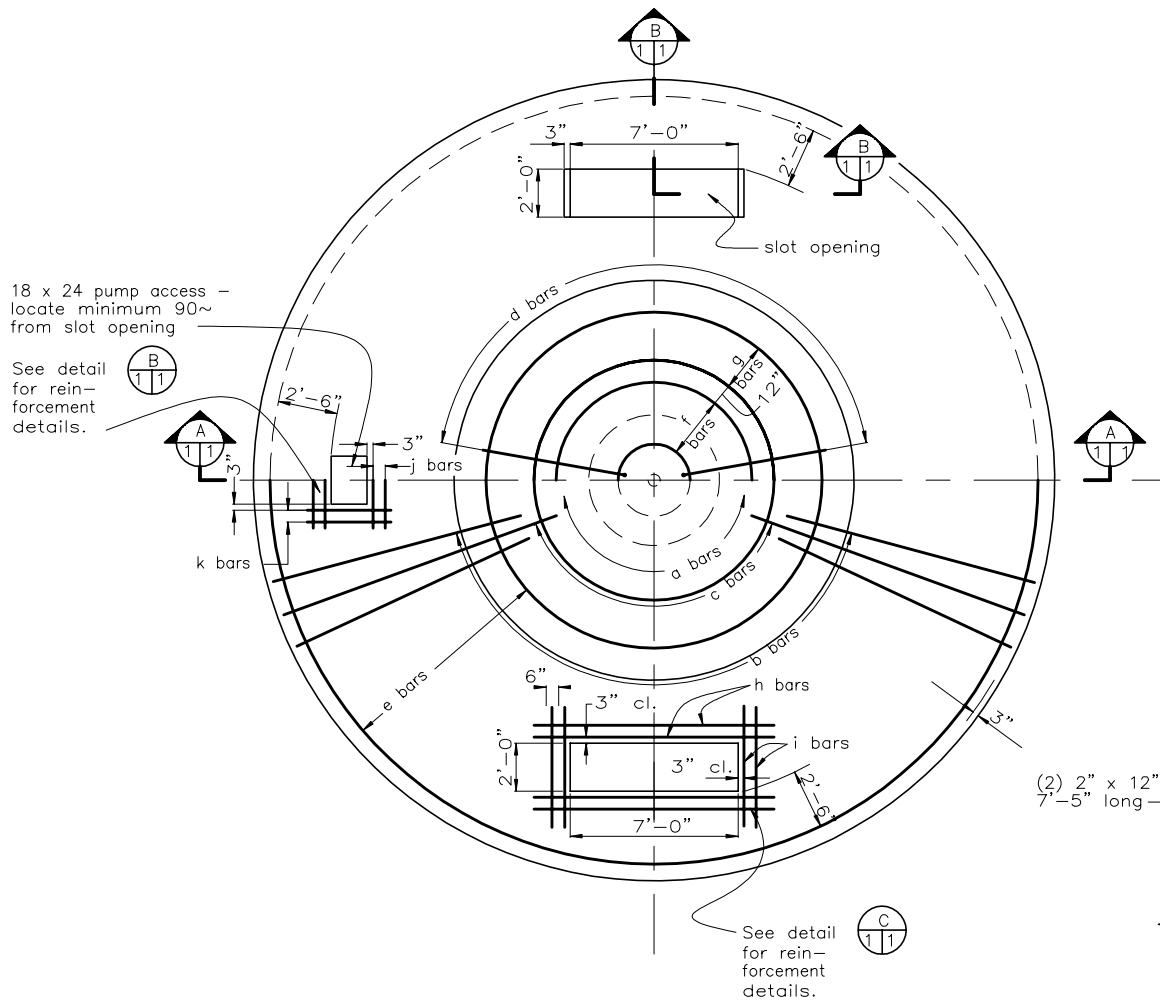

PLAN OF COVER SLAB

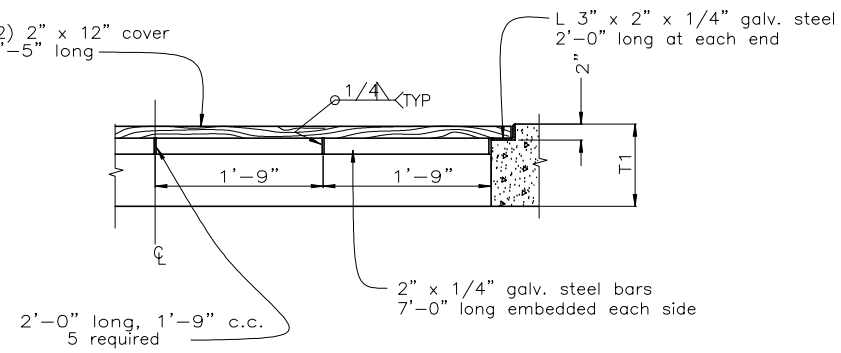

SECTION B 1 1

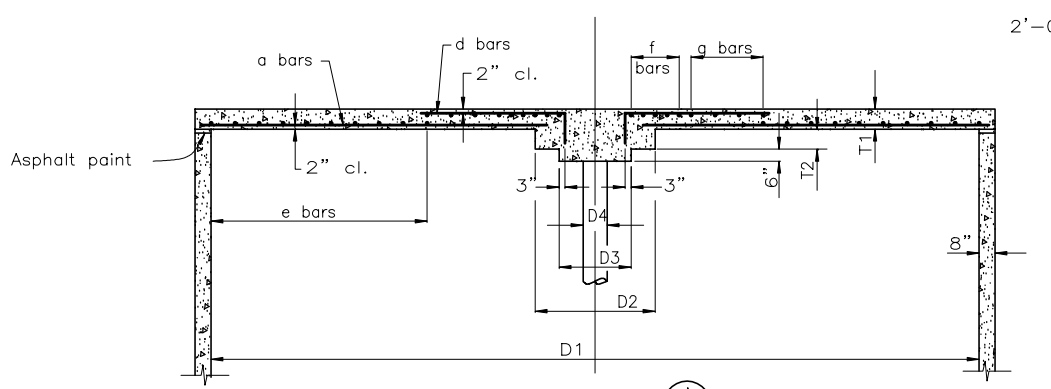

SECTION A 1 1

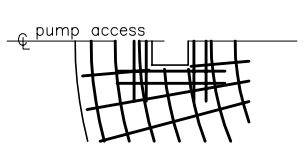

DETAIL B 1 1

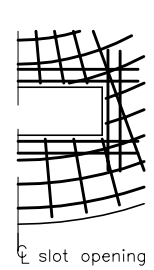

DETAIL C 1 1

TOP FACE
symmetrical about ℄
symmetrical about ℄
BOTTOM FACE

DIMENSION SCHEDULE

DIMENSION	DIAMETER 32'	DIAMETER 48'
D1	32'-0"	48'-0"
D2	5'-0"	10'-6"
D3	3'-0"	4'-6"
D4	1'-0"	1'-6"
T1	0'-10"	1'-0"
T2	0'-10"	1'-6"

CONCRETE QUANTITIES

DEPTH	DIAMETER 32'	DIAMETER 48'
6'	68.6 cy	168.5 cy
8'	74.1 cy	177.5 cy
10'	79.6 cy	186.1 cy

TANK CAPACITY (GAL)

DEPTH	DIAMETER 32'	DIAMETER 48'
6'	35,700	79,900
8'	47,700	106,900
10'	59,700	133,900

REINFORCING SCHEDULE

32' DIAMETER

REINF BARS	SIZE	LENGTH	SPACING	WHERE SPACING MEASURED	QUAN EACH	TOTAL LENGTH
a	5	14'-5"	5'-7"	16'-0" from center	18	259'-6"
b	5	10'-8"	2'-9 1/2"	16'-0" from center	36	384'-0"
c	5	12'-1"	5'-7"	16'-0" from center	18	217'-6"
d	4	7'-3"	2'-1"	6'-0" from center	18	130'-6"
e	4	45'-6" to 102'-0"	1'-0"	7'-0" to 16'-0" from center	10	737'-6"
f	6	10'-11" to 26'-8"	0'-6"	1'-6" to 4'-0" from center	5	94'-0"
g	6	32'-11" to 45'-6"	1'-0"	5'-0" to 7'-0" from center	3	117'-8"
h	4	10'-0"	0'-6"	as shown	4	40'-0"
	7	5'-0"	0'-6"	as shown	4	20'-0"
j	5	4'-0"	0'-6"	as shown	4	16'-0"
k	5	4'-6"	0'-6"	as shown	4	14'-0"

48' DIAMETER

REINF BARS	SIZE	LENGTH	SPACING	WHERE SPACING MEASURED	QUAN EACH	TOTAL LENGTH
a	7	19'-8"	4'-1"	19'-6" from center	30	590'-0"
b	7	15'-5"	2'-0 1/2"	19'-6" from center	60	925'-0"
c	7	17'-5"	4'-1"	19'-6" from center	30	522'-6"
d	4	9'-3"	1'-10 5/8"	9'-0" from center	30	315'-0"
e	5	70'-7" to 152'-4"	1'-0"	11'-0" to 24'-0" from center	14	1560'-5"
f	7	15'-8" to 39'-2"	0'-7 1/2"	2'-3" to 6'-0" from center	7	191'-11"
g	7	45'-6" to 70'-7"	1'-0"	7'-0" to 11'-0" from center	5	290'-3"
h	6	10'-0"	0'-6"	as shown	4	40'-0"
*	7	5'-0"	0'-6"	as shown	8	40'-0"
j	5	4'-0"	0'-6"	as shown	4	16'-0"
k	6	3'-6"	0'-6"	as shown	4	14'-0"

* Group "i" bars in pairs on each side of opening

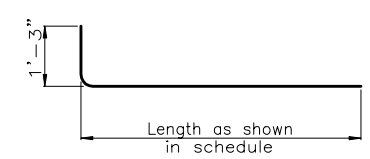

d bars

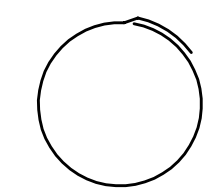

Length includes 18" splice. Add 18" for each additional splice for e, f, amd g bars.

DESIGN NOTES

DESIGN LOADS:
- Cover slab: live load = 150 psf
- Floor slab: 3.75' of submergence (floatation – max 7.5' of submergence)
- Wall: 100 psf equivalent fluid pressure plus 100 psf surcharge
- Soil bearing pressure: 2,000 psf

DESIGN CRITERIA:
- Concrete: 28 day compressive strength = 3,500 psi
- f_c = 1,400 psi
- Tensile strength = 95 psi
- Reinforcing steel: ASTM A615 grade 40
- f_s = 20,000 psi

CONSTRUCTION AND INSPECTION REQUIREMENTS

1. Air entrainment admixture shall be used to obtain a range of 5% to 7% air. Maximum slump shall be 4 inches.
2. Concrete shall be evenly distributed in forms and mechanically vibrated to assure consolidation. Concrete shall be prevented from drying for a period of at least 7 days. A curing compound may be used in lieu of continued application of water.
3. Forms for cover slab shall not be removed less than 10 days after placement of concrete.
4. Defective concrete (e.g. honeycombs) shall be repaired.
5. Backfill uniformly around perimeter of tank in 8 inch lifts and compact. Backfill to full height of wall prior to placing cover slab.
6. Diversion of surface water and dewatering of the construction site shall be provided during the construction period, until the cover slab is in place and cured, to permit work in the dry and to avoid uplift pressures on the floor slab.

GENERAL NOTES

1. Lap all splices 1'-6".
2. Measure spacings of radial bars along circular arcs.
3. Minimum radius of bend on reinforcing bars shall be 3 times the diameter of the bar being bent.
4. Tank wall may be used to support a building of the type used for housing pigs, chickens, cows, etc.
5. Paint interior surfaces with two coats of asphalt paint.
6. Additional slot openings shall be located 90~ apart.
7. Cover slab is designed to support two 8,000 pound wheel loads.

Practice Code _____ Job Class _____

		DATE
Designed	R. L. H.	9/90
Drawn	K Yasumiishi	
Checked	B. Wilson	10/90
Approved	Roy Bright	10/90
Title	State Conservation Engineer	

COVERED LIQUID MANURE TANK
32' AND 48' DIAMETER

USDA NRCS Natural Resources Conservation Service

File Name AWM313410-1of2.dwg

Oregon Standard Number AWM-313410

Sheet No. 1 of 2