# TABLE 1

STRUCTURE DIMENSIONS

Clear Height: Hclear = ____ft.

Clear Span: Span = ____ft.

Roof Slope: S = ____ in 12

LOADS

Dead Load: DL = ____psf

Snow Load: SL = ____psf

Wind Speed: V = ____mph

Exposure: Sheltered

POLE SPECIFICATIONS

Size: ____in x ____in
(specify actual dimensions)

Spacing: _____ft.

Pole Height: Hpole = ____ft.

Species: _____

Grade: _____

KNEE BRACE SPECIFICATIONS

Size: 2 in x __ in, nominal

Species: Douglas Fir – Larch

Grade: No. 2 or better

PURLINS

Size: 2 in x __ in, nominal

Position: flat on edge (circle one)

Spacing: 24 in. o.c.

Species: Douglas Fir – Larch

Grade: No. 2 or better

GIRTS

Size: 2 in x 6 in, nominal

Spacing: 24 in. o.c.

Species: Douglas Fir – Larch, No. 2 or better

Max. Spacing for Girt Supports: _____ft.

FASTENERS

Knee Brace to Pole (Detail A)

____ – 3/4 in. dia. bolt(s) and

4 – 16d nails

Knee Brace to Truss (Detail B)

____ – ____in. dia. bolt(s) and

2 – 12d or 16d nails

Corbel Block to Pole

____ – 3/4 in. dia. bolt(s) and

____ – ____d nails (spaced evenly)

Truss to Pole (Detail C)

____ – 3/4 in. dia. bolt(s) and

____ – ____d nails

____ lbs. extra uplift capacity needed
(half on each side of pole)

Purlin Fasteners

____ – 16d nails (A)

____ – 16d nails (B)

Framing Anchor Uplift Capacity: _____lbs.

Girt Fasteners

____ – ____d nails (B)

POLE EMBEDMENT

Depth: _____ft.

Diameter: _____ft.

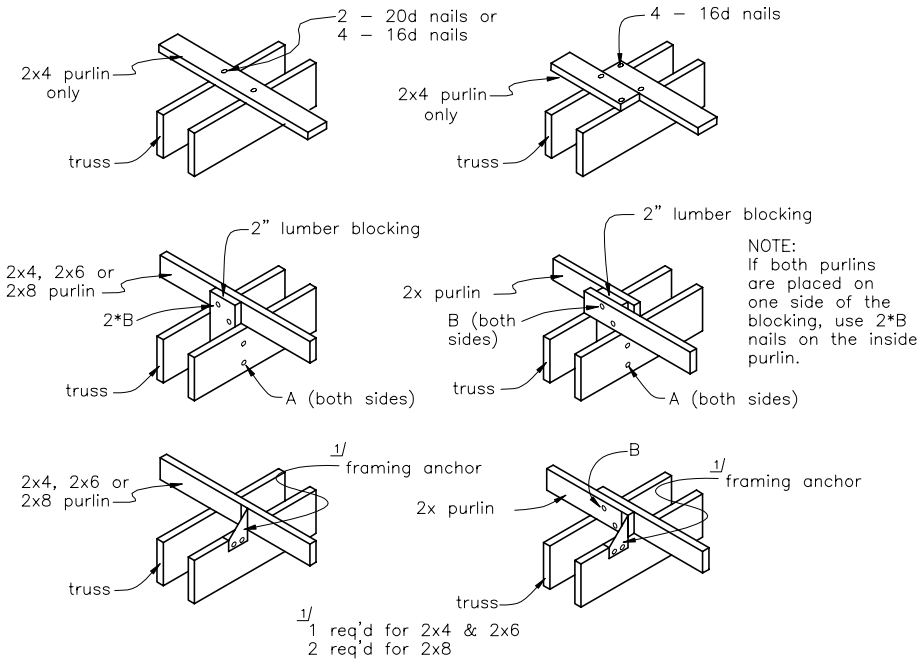


## PURLIN DETAILS
(see Table 1 for details)

NOTE: Poles shall be pressure–treated with ACA, ACZA, CCA, or similar waterborne compounds at a minimum net retention rate of 0.60 pcf.

## TRUSS TIES AND CROSS BRACING

| truss spacing | size | nails each end |
|---|---|---|
| 4 ft | 2" x 4" | 2 – 16d |
| 8 ft | 2" x 6" | 3 – 16d |
| 12 ft | 2" x 8" | 4 – 16d |

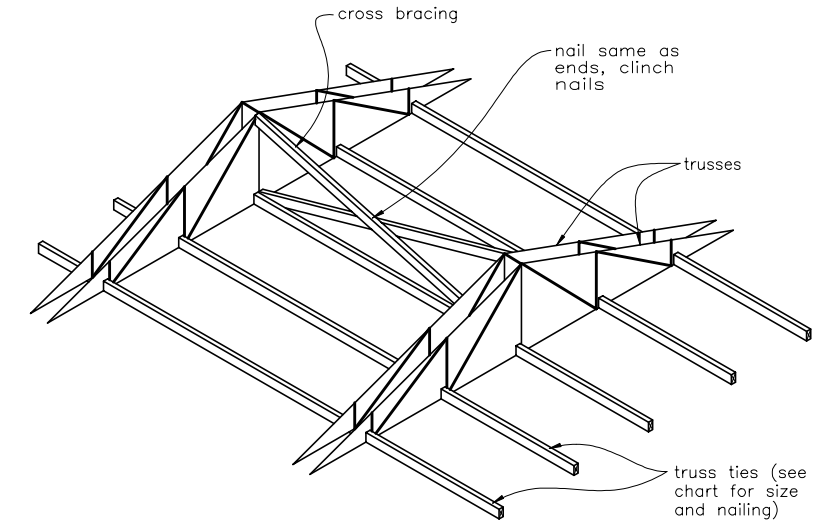


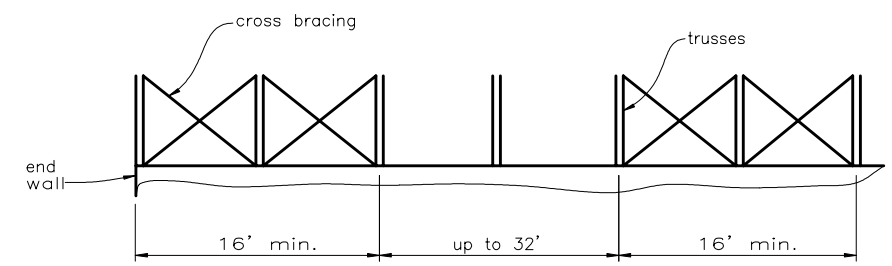


WINDBRACING: Brace and anchor the trusses as they are placed. Bottom chord stiffeners as required at panel points unless a rigid ceiling is to be installed. Use crossbracing in all buildings.

## WINDBRACING DETAIL

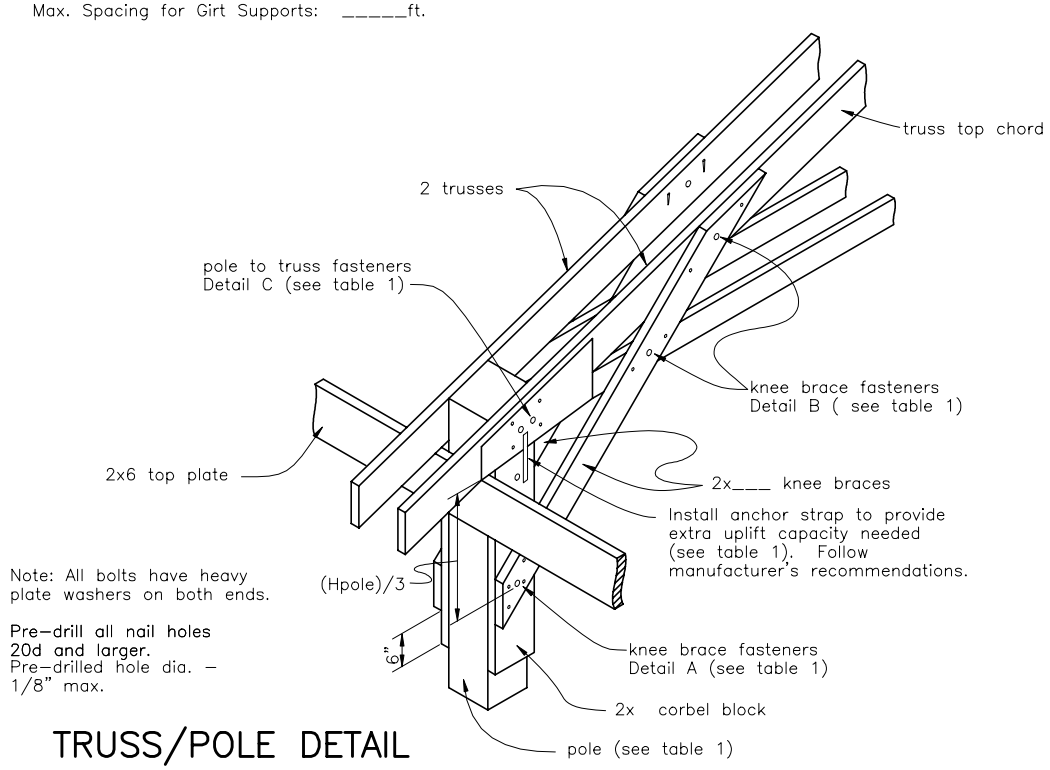


Note: All bolts have heavy plate washers on both ends.

**Pre–drill all nail holes 20d and larger.**
Pre–drilled hole dia. – 1/8" max.

## TRUSS/POLE DETAIL

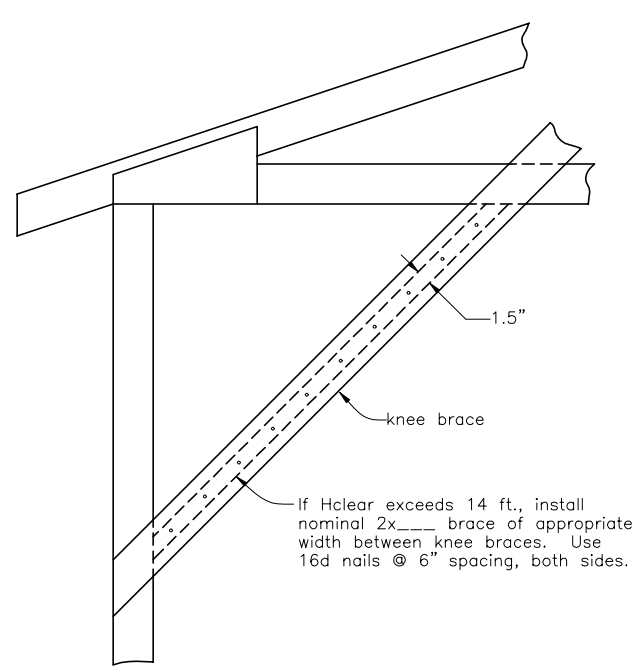


## KNEE BRACE DETAIL
(Hclear > 14 ft.)

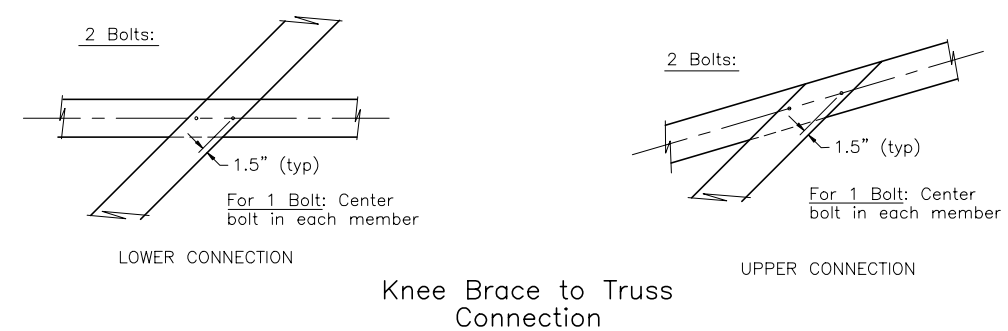


Knee Brace to Truss Connection

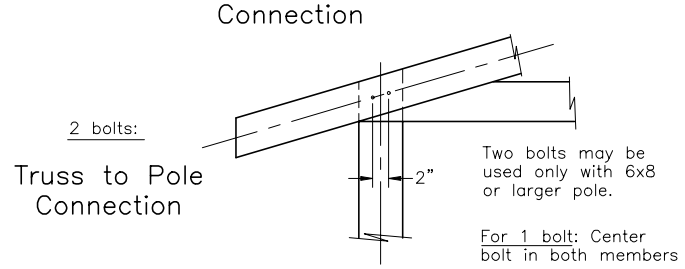


Truss to Pole Connection

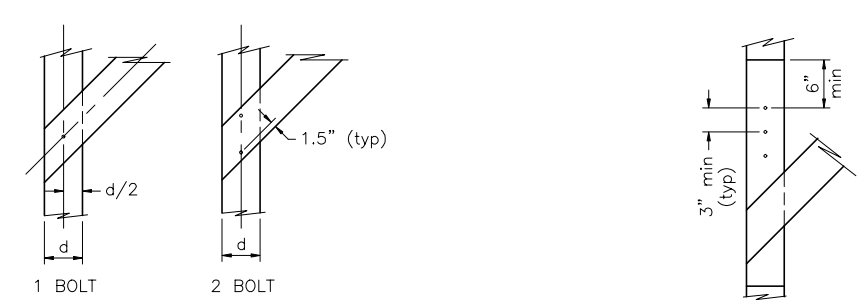


Pole to Knee Brace Connection

Pole to Corbel Block Connection

## BOLT PLACEMENT DETAILS

| | | DATE |
|---|---|---|
| Designed | Ben Doerge | 6/94 |
| Drawn | k. yosumiishi | 6/94 |
| Checked | | Date |
| Approved | | |
| Title | | |

# WASTE STACKING FACILITY
ABOVE GROUND – COVERED – POLES EMBEDDED IN GROUND
___ FT. STORAGE DEPTH

USDA NRCS Natural Resources Conservation Service

File Name
AWM313310–2of2.dwg

Oregon Standard Number
AWM–313310

Sheet No. 2 of 2