TABLE 1

STRUCTURE DIMENSIONS

Clear Height: Hclear = ____ft.

Wall Height: Hwall = ____ft.

Clear Span: Span = ____ft.

Roof Slope: S = ____ in 12

LOADS

Dead Load: DL = ____psf

Snow Load: SL = ____psf

Wind Speed: V = ____mph

Exposure: Sheltered

POLE SPECIFICATIONS

Size: ____in x ____in
(specify actual dimensions)

Spacing: _____ft.

Pole Height: Hpole = ____ft.

Species: _____

Grade: _____

KNEE BRACE SPECIFICATIONS

Size: 2 in x 6 in, nominal

Species: Douglas Fir – Larch

Grade: No. 2 or better

PURLINS

Size: 2 in x __in, nominal

Position: flat on edge (circle one)

Spacing: 24 in. o.c.

Species: Douglas Fir – Larch

Grade: No. 2 or better

GIRTS

Size: 2 in x 6 in, nominal

Spacing: 24 in. o.c.

Species: Douglas Fir – Larch, No. 2 or better

Max. Spacing for Girt Supports: _____ft.

FASTENERS

Knee Brace to Pole (Detail A)

____ – 3/4 in. dia. bolt(s) and
4 – 16d nails

Knee Brace to Truss (Detail B)

____ – ____in. dia. bolt(s) and
2 – 12d or 16d nails

Corbel Block to Pole

____ – 3/4 in. dia. bolt(s) and
____ – ____d nails (spaced evenly)

Truss to Pole (Detail C)

____ – 3/4 in. dia. bolt(s) and
____ – ____d nails
____ lbs. extra uplift capacity needed
(half on each side of pole)

Purlin Fasteners

____ – 16d nails (A)
____ – 16d nails (B)

Framing Anchor Uplift Capacity: _____lbs.

Girt Fasteners

____ – ____d nails (B)

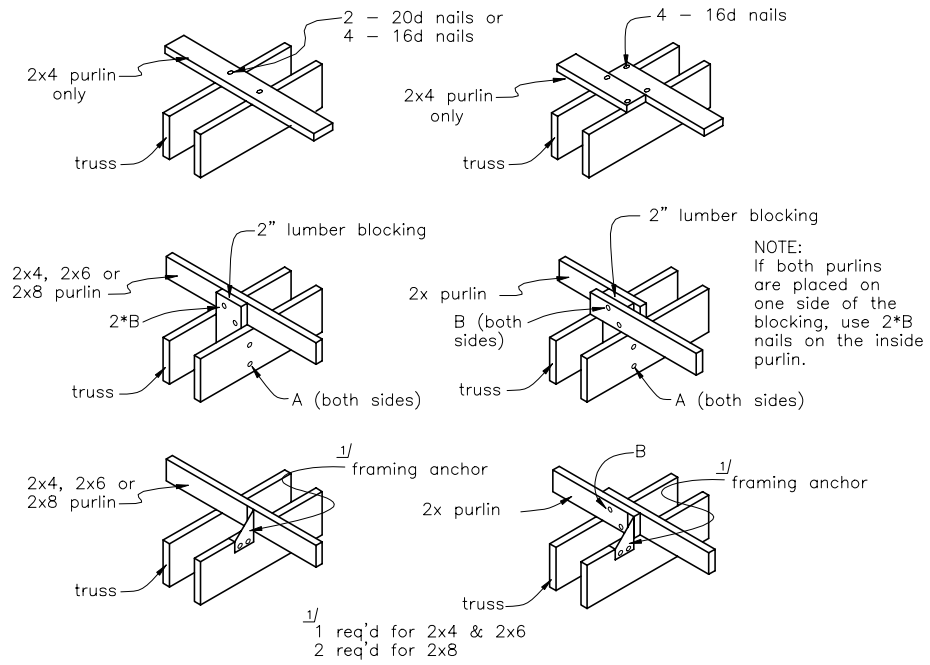

PURLIN DETAILS
(see Table 1 for details)

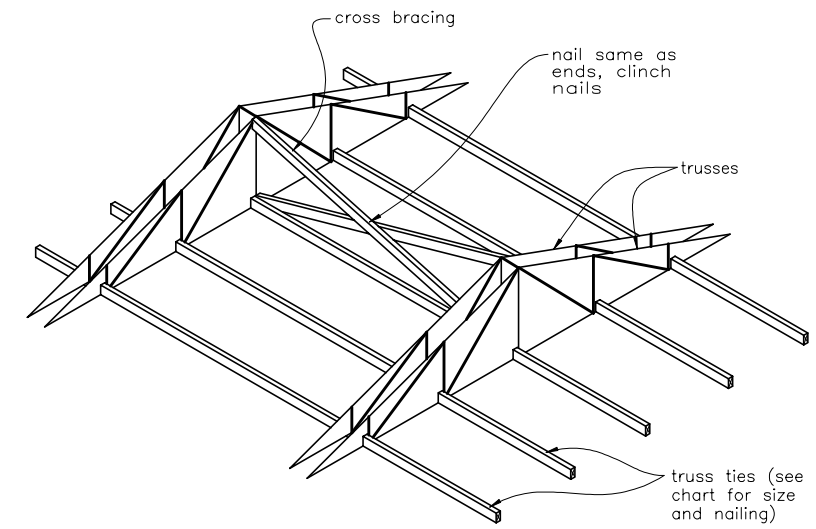

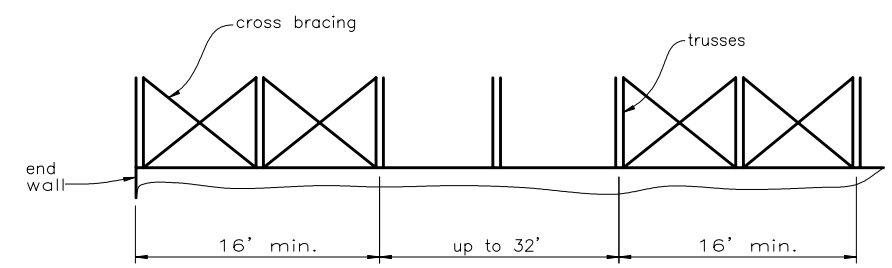

WINDBRACING: Brace and anchor the trusses as they are placed. Bottom chord stiffeners as required at panel points unless a rigid ceiling is to be installed. Use crossbracing in all buildings.

WINDBRACING DETAIL

TRUSS TIES AND CROSS BRACING

truss spacing	size	nails each end
4 ft	2" x 4"	2 – 16d
8 ft	2" x 6"	3 – 16d
12 ft	2" x 8"	4 – 16d

NOTE: Poles shall be pressure–treated with ACA, ACZA, CCA, or similar waterborne compounds at a minimum net retention rate of 0.60 pcf.

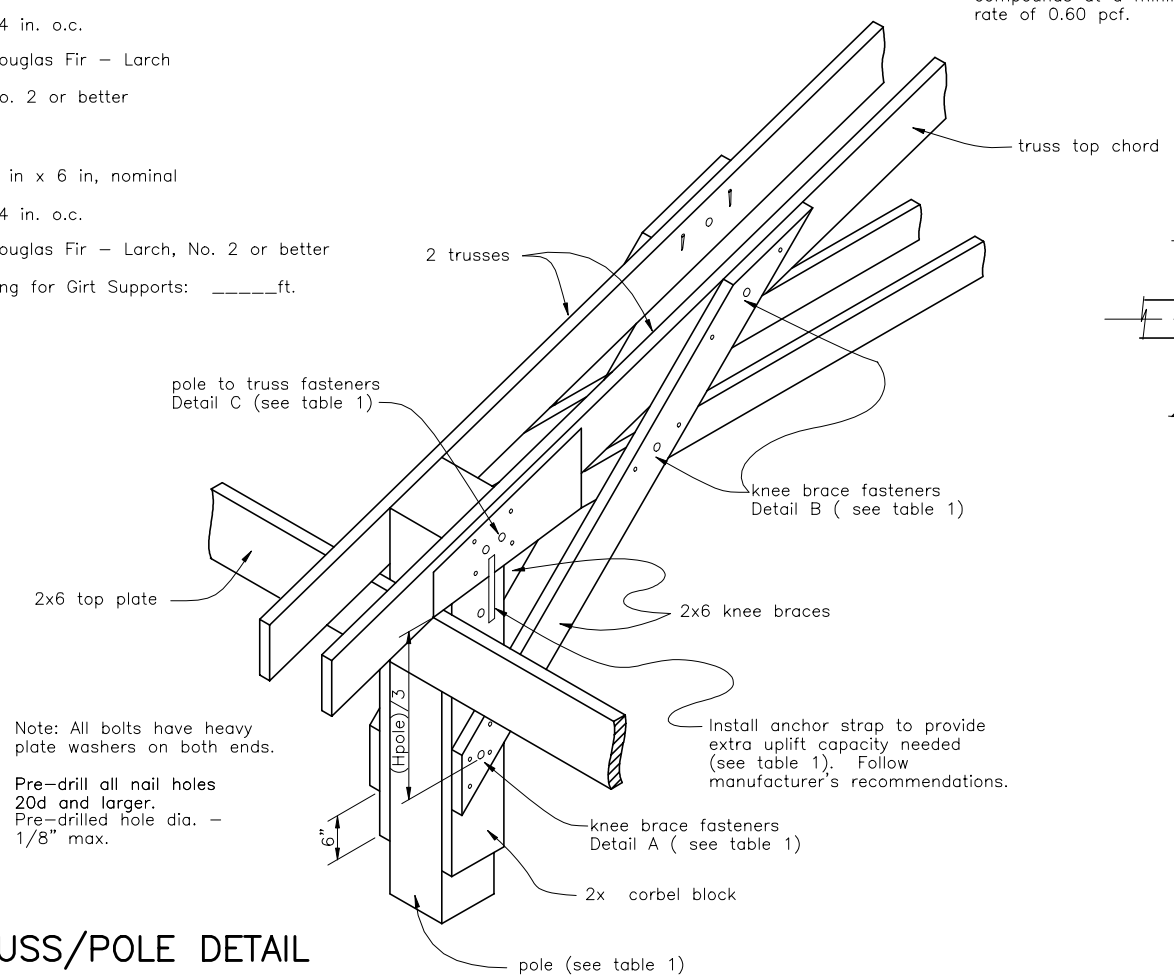

Note: All bolts have heavy plate washers on both ends.

Pre–drill all nail holes 20d and larger.
Pre–drilled hole dia. – 1/8" max.

TRUSS/POLE DETAIL

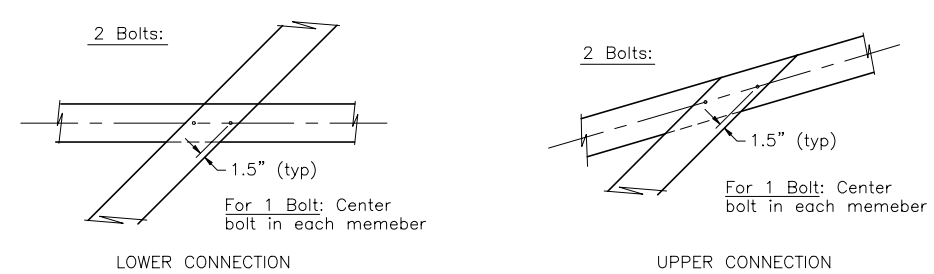

Knee Brace to Truss Connection

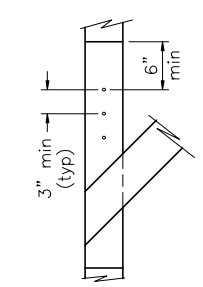

Pole to Corbel Block Connection

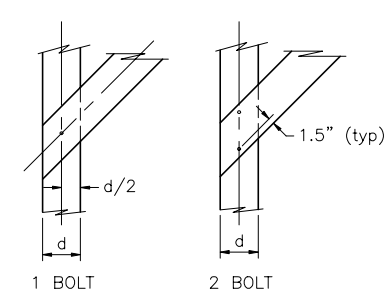

Pole to Knee Brace Connection

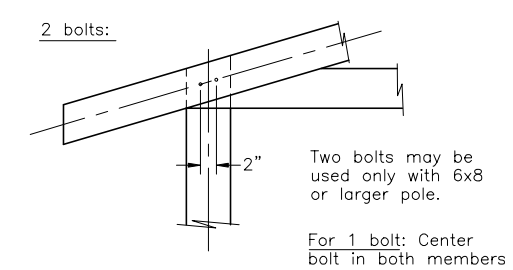

Truss to Pole Connection

BOLT PLACEMENT DETAILS

DATE
Designed Ben Doerge 3/93
Drawn k. yosumiishi 4/93
Checked
Approved
Title

WASTE STACKING FACILITY
ABOVE GROUND – COVERED – WALL MOUNTED
___' WALL HEIGHT – ___' MAXIMUM STORAGE HEIGHT

USDA NRCS Natural Resources Conservation Service

File Name
AWM313240–2of2.dwg

Oregon Standard Number
AWM–313240

Sheet No. 2 of 2