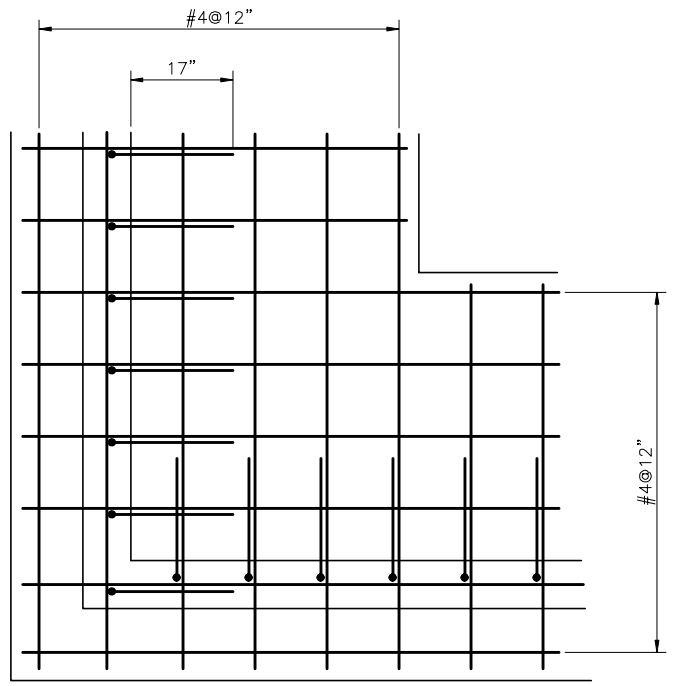

CORNER DETAIL
(PLAN VIEW OF FLOOR SLAB)

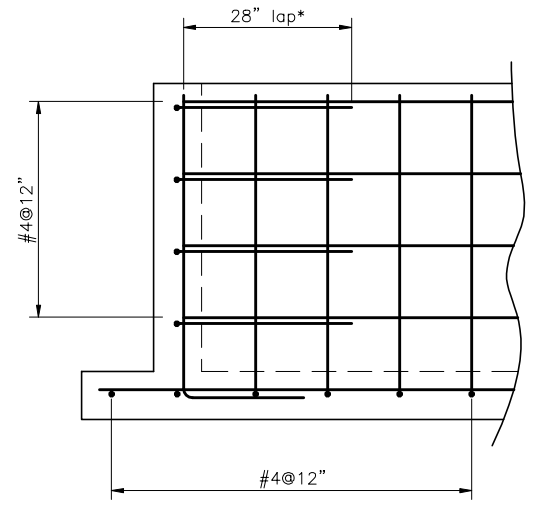

CORNER DETAIL
(ELEVATION VIEW)

* Splice length may be reduced to 22" if splices are staggered at least one lap length.

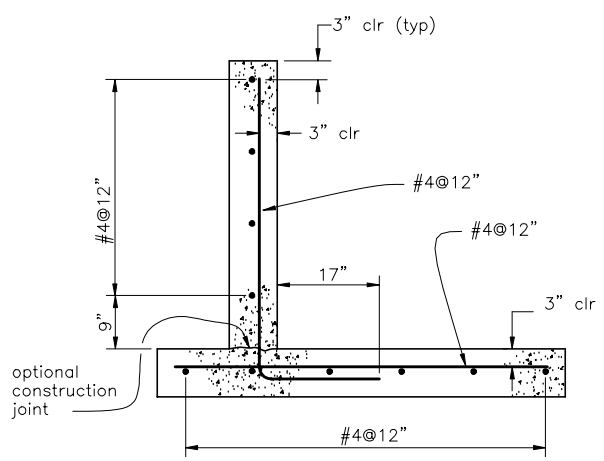

TYPICAL SECTION OF SIDEWALL
(CORNER DETAILS NOT SHOWN)

1 0 2
SCALE IN FEET

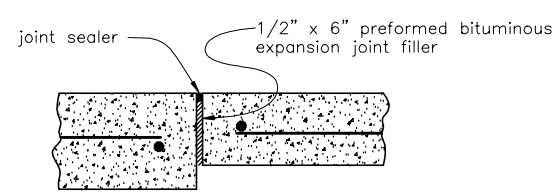

EXPANSION JOINT DETAIL

CONCRETE SPECIFICATIONS:

1. The concrete shall be proportioned, transported, and placed in accordance with Specifications for Structural Concrete for Buildings – ACI 301–89. The concrete shall have a minimum compressive strength at 28 days of 3000 psi. Minimum cement content shall be 6 bags/cy and maximum net water content shall be 7 gallons/sack. The slump shall be 2 to 4 inches and the air content shall be 5 to 8% of the volume of concrete.
2. Forms shall be mortar tight, substantial and unyielding and shall be constructed so that the finished concrete will conform to the specified dimensions. Metal ties within the forms shall be equipped with a device that permits their removal to a depth of at least 1 inch without injury to the concrete.
3. The concrete shall be deposited as closely as possible to its final position in the forms and shall be worked into the corners and angles of the forms and around all reinforcement. Immediately after placement concrete shall be consolidated by vibrating.
4. Surfaces of all construction joints shall be cleaned by washing and scrubbing with a wire brush or broom.
5. Forms shall not be removed before 24 hours have elapsed after placement of concrete.
6. Holes produced by the removal of form ties, cone bolts, etc., shall be cleaned, wetted, and filled with dry pack mortar. Cone bolt holes may also be filled with pre–molded plugs set in epoxy,
7. Concrete shall be prevented from drying for a curing period of at least 7 days after it is placed. The slab and footings shall be kept continuously moist for the entire period or until curing compound is applied. Moisture shall be maintained by sprinkling, flooding, covering with plastic sheeting, continuously moistened canvas, cloth mats, straw, or other approved material. The walls shall be thoroughly wetted immediately after forms are removed and shall be kept wet until patching and repairs are made. After patching and repairs are made, curing compound may be applied in lieu of wetting. Curing compound shall meet the requirements of ASTM C 309, Type 2.
8. Concrete shall not be dropped more than 5 feet vertically unless suitable equipment is used to prevent segregation.
9. Reinforcing steel shall be ASTM designation A–615, grade 60. Bars shall be bent in accordance with Manual of Standard Practice for Detailing Reinforced Concrete Structures, ACI 315–80.
10. Welded wire fabric, if used, shall meet the requirements of ASTM A 185.

DESIGN NOTES:

1. Foundation is to be field investigated to determine adequacy to support structure. Footing bearing pressure resulting from design loads is approximately 800 psf.
2. Frost heave potential should be considered on a site–by–site basis. Additional free–draining rock or other protection methods should be provided as needed.
3. The compacted crushed rock shall be angular, clean, well graded material and shall be compacted by at least one pass of the track or wheel tread of the loading and spreading equipment over every point in the layer.
4. The concrete structure is designed for an internal hydrostatic load of 60 lbs/cu ft. No backfill will be permitted on the outside of the wall.
5. The structure is designed according to the criteria in NRCS Practice Standard 313 for a medium service life (20 year minimum).
6. The clear height for this structure may not exceed 17.5 feet.

Unless otherwise marked, all splices shall be as follows:

Horizontal bars in walls	All other bars
#4	#4
28"*	22"

		DATE
Designed	B.C. Doerge	7/93
Drawn	k. yasumiishi	7/93
Checked		
Approved		
Title		

WASTE STACKING FACILITY
ABOVE GROUND – COVERED – WALL MOUNTED POLES
4' WALL HEIGHT – 4' MAXIMUM STORAGE DEPTH

USDA NRCS
Natural Resources Conservation Service

File Name
AWM313210–2of2.dwg

Oregon Standard Number
AWM–313210

Sheet No. 2 of 2