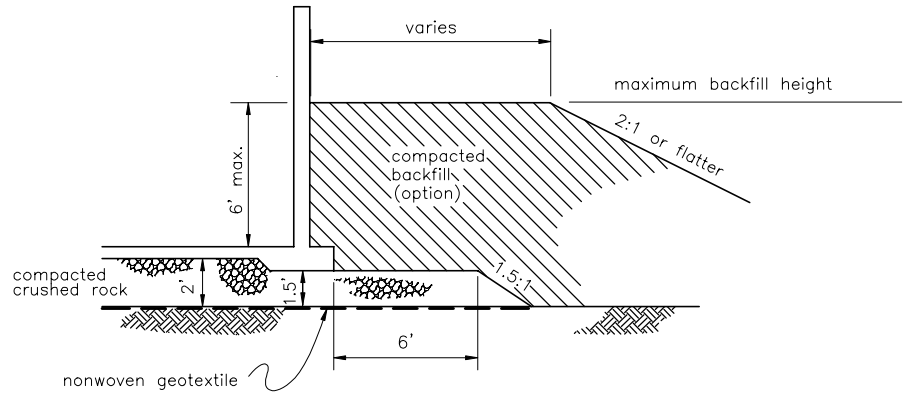

BACKFILL DETAILS

(not to scale)

Notes

1. Strip all vegetation, organic matter and unsuitable material from foundation.
2. Level entire foundation area by excavating to a level surface (no fill allowed).
3. Overlap adjacent panels of geotextile 3 feet (minimum).
4. Backfill to top of footing (min.) after removal of forms.
5. See Oregon Std. Drawing AWM–313001 for additional backfill details.
6. The crushed rock shall consist of hard, durable mineral particles with no more than 12% (by dry weight) passing the No. 200 sieve.
7. The crushed rock shall be compacted in 12–inch lifts by at least two passes of a smooth drum roller, or approved equivalent method.

Requirements for Nonwoven Geotextiles

Property	Units	Test Method	Maximum Rock Size on Geotextile: Larger than 3–inch, Class I	Maximum Rock Size on Geotextile: 3–inch or smaller, Class IV
Tensile Strength (MARV)	pounds	ASTM D4632 Grab Test	180 minimum	115 minimum
Bursting Strength (MARV)	psi	ASTM D3786 Diaphragm Tester	320 minimum	180 minimum
Elongation at Failure (MARV)	percent	ASTM D4632	>50	>50
Puncture	pounds	ASTM D4833	80 minimum	40 minimum
Ultraviolet Light	percent residual tensile strength	ASTM D4355 (150 hrs. exposure)	70 minimum	70 minimum
Apparent Opening Size	U.S. Standard Sieve Size	ASTM D4751	Max. #40	Max. #40
Pemittivity	sec^{-1}	ASTM D4491	0.70 minimum	0.70 minimum

MARV=Minimum Average Roll Value (weakest principal direction)

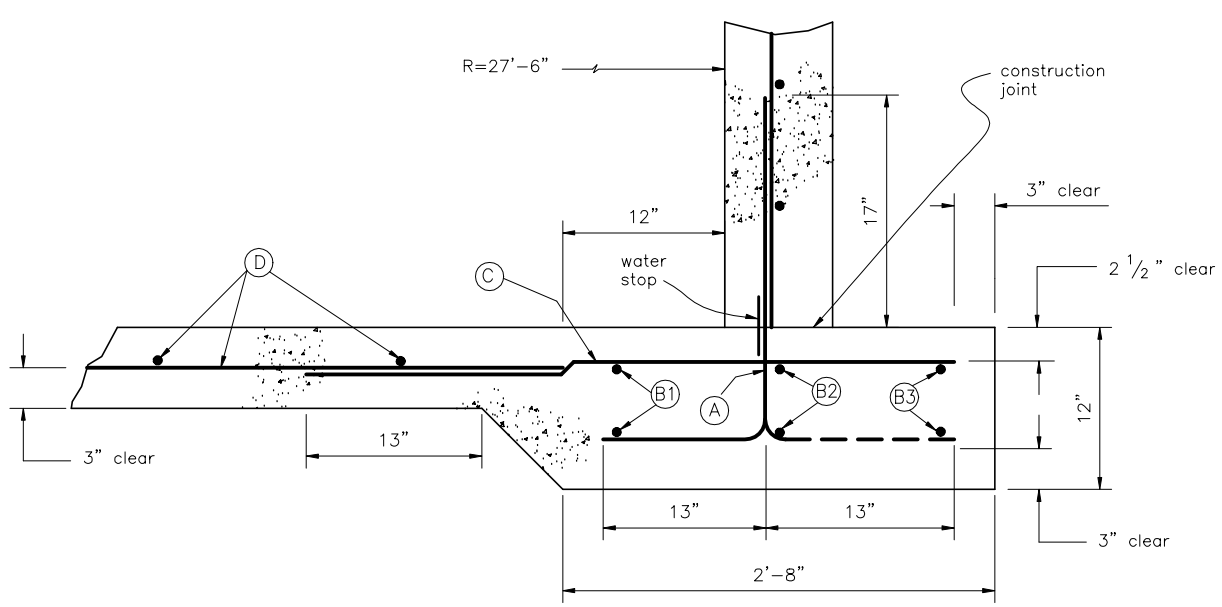

Note
Turn (A) bars alternately inward and outward.

FOOTING AND FLOOR STEEL DETAIL

(not to scale)

STEEL SCHEDULE

Quantity	Mark	Bar Size	a	b	L*	Spacing
234	A	#5	26"	13"	3'–3"	9"@R=27'–10"
2	B1	#4	–	–	168'–7"	Circumferential bars@R=26'–10"
2	B2	#4	–	–	174'–10 1/2"	Circumferential bars@R=27'–10"
2	B3	#4	–	–	181'–2"	Circumferential bars@R=28'–10"
234	C	#4	–	–	4'–0"	9"@R=27'–10"
–	D	#4	–	–	varies	18" each way, floor steel
13	H	#5	–	–	175'–2 1/2"	varies
117	V1	#5	–	–	9'–9"	18"@R=27'–10", alt. w/ V2 bars
117	V2	#5	–	–	5'–0"	18"@R=27'–10", alt. w/ V1 bars

* Lengths shown do not include splice lengths.

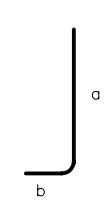

A BAR

L=length

C BAR

		DATE
Designed	Ben Doerge	10/2000
Drawn	Linda Kamna	10/2000
Checked	Ben Doerge	10/2000
Approved		
Title		

WASTE STORAGE TANK
ABOVE GROUND CIRCULAR CONCRETE
10' HIGH X 55' DIA. – 23,758 CU. FT.

USDA NRCS
Natural Resources Conservation Service

File Name
AWM313070–2of2.dwg

Oregon Standard Number
AWM–313070

SHEET NO. 2 OF 2